Dome-Top® Barb Ty Clamp Ties – Nylon 6.6

- For indoor use
- Used to secure a cable bundle to another surface such as a control panel, communication rack, wall or ceiling
- Design allows for bundling before or after screwing clamp in place
- Stainless steel locking barb provides consistent performance, reliability, and infinite adjustability through entire bundle range
- Curved tip is easy to pick up from flat surfaces and allows faster initial threading to speed installation
- UL Listed for use in plenum or air handling spaces per NEC

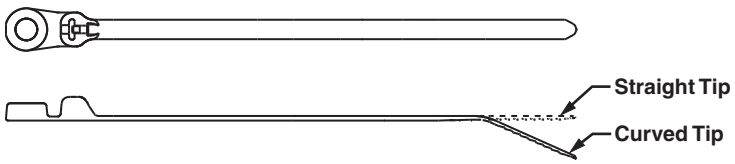

Part Number	Length In.	Length mm	Width In.	Width mm	Thickness In.	Thickness mm	Nominal Hole Dia. In.	Nominal Hole Dia. mm	Screw Size	Metric Screw Size	Max. Bundle Dia. In.	Max. Bundle Dia. mm	Min. Loop Tensile Str. Lbs.	Min. Loop Tensile Str. N	Recommended Installation Tool	Std. Pkg. Qty.	Std. Ctn. Qty.
Miniature Cross Section – Plenum-Rated																	
BC1M-S4-M	4.6	117	.095	2.4	.046	1.2	.122	3.1	#4	M2.5	.90	23	18	80	GTS, GTSL, GS2B, PTS, PPTS, STS2	1000	50000
BC2M-S4-M	8.3	211	.095	2.4	.046	1.2	.122	3.1	#4	M2.5	2.00	51	18	80		1000	25000
Intermediate Cross Section – Plenum-Rated																	
BC1.5I-S8-M	6.6	168	.141	3.6	.041	1.0	.174	4.4	#8	M4	1.50	38	40	178	GTS, GTSL, GS2B, PTS, PPTS, STS2	1000	25000
Standard Cross Section – Plenum-Rated																	
BC2S-S10-C	8.5	216	.185	4.7	.052	1.3	.200	5.1	#10	M5	2.00	51	50	222	GTS, GTSL, GS2B, GTH, GS4H, PTS, PTH, PPTS, STS2, STH2	100	1000
BC3S-S10-D	12.5	318	.185	4.7	.052	1.3	.200	5.1	#10	M5	3.00	76	50	222		500	5000
BC4S-S10-C	15.6	396	.185	4.7	.052	1.3	.200	5.1	#10	M5	4.00	102	50	222		100	1000
Light-Heavy Cross Section (Straight Tip) – Plenum-Rated																	
BC4LH-S25-L	15.5	394	.275	7.0	.065	1.7	.260	6.6	1/4	M6	4.00	102	120	534	GTH, GS4H, GS4EH, PTH, STH2, ST3EH	50	500

Order number of pieces required, in multiples of Standard Package Quantity.

Prime items appear in **BOLD**.

Courtesy of Steven Engineering, Inc.-230 Ryan Way, South San Francisco, CA 94080-6370-Main Office: (650) 588-9200-Outside Local Area: (800) 258-9200-www.stevenengineering.com

Dome-Top® Barb Ty Clamp Ties – Weather Resistant and Heat Stabilized Nylon 6.6

- Weather Resistant material has greater resistance to damage caused by ultraviolet light – indoor or outdoor use
- Heat stabilized material for high temperature applications up to 239°F (115°C) – indoor use
- Used to secure a cable bundle to another surface such as a control panel, communication rack, wall or ceiling
- Design allows for bundling before or after screwing clamp in place
- Stainless steel locking barb provides consistent performance, reliability, and infinite adjustability through entire bundle range
- Curved tip is easy to pick up from flat surfaces and allows faster initial threading to speed installation

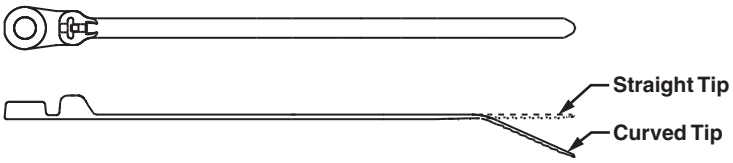

Part Number	Length In.	Length mm	Width In.	Width mm	Thickness In.	Thickness mm	Nominal Hole Dia. In.	Nominal Hole Dia. mm	Screw Size	Metric Screw Size	Max. Bundle Dia. In.	Max. Bundle Dia. mm	Min. Loop Tensile Str. Lbs.	Min. Loop Tensile Str. N	Recommended Installation Tool	Std. Pkg. Qty.	Std. Ctn. Qty.
Weather Resistant Nylon 6.6																	
Miniature Cross Section																	
BC1M-S4-M0	4.6	117	.095	2.4	.046	1.2	.122	3.1	#4	M2.5	.90	23	18	80	GTS, GTSL, GS2B, PTS, PPTS, STS2	1000	50000
BC2M-S4-M0	8.3	211	.095	2.4	.046	1.2	.122	3.1	#4	M2.5	2.00	51	18	80		1000	25000
Intermediate Cross Section																	
BC1.5I-S8-M0	6.6	168	.141	3.6	.041	1.0	.174	4.4	#8	M4	1.50	38	40	178	GTS, GTSL, GS2B, PTS, PPTS, STS2	1000	25000
Standard Cross Section																	
BC2S-S10-C0	8.5	216	.185	4.7	.052	1.3	.200	5.1	#10	M5	2.00	51	50	222	GTS, GTSL, GS2B, GTH, GS4H, PTS, PTH, PPTS, STS2, STH2	100	1000
BC3S-S10-D0	12.5	318	.185	4.7	.052	1.3	.200	5.1	#10	M5	3.00	76	50	222		500	5000
BC4S-S10-C0	15.6	396	.185	4.7	.052	1.3	.200	5.1	#10	M5	4.00	102	50	222		100	1000
Light-Heavy Cross Section (Straight Tip)																	
BC4LH-S25-L0	15.5	394	.275	7.0	.065	1.7	.260	6.6	1/4	M6	4.00	102	120	534	GTH, GS4H, GS4EH, PTH, STH2, ST3EH	50	500
Heat Stabilized Nylon 6.6																	
Standard Cross Section																	
BC4S-S10-D30	15.6	396	.185	4.7	.052	1.3	.200	5.1	#10	M5	4.00	102	50	222	GTS, GTSL, GS2B, GTH, GS4H, PTS, PTH, PPTS, STH2, STS2	500	5000

Note: UL Recognized and CSA Certified except BC4LH-S25-L0.

Courtesy of Steven Engineering, Inc.-230 Ryan Way, South San Francisco, CA 94080-6370-Main Office: (650) 588-9200-Outside Local Area: (800) 258-9200-www.stevenengineering.com

Selection Guide – Dome-Top® Barb Ty and Dura-Ty™ Cable Ties

Material, Color (Suffix)	Style/Function	Part Number Prefix	Catalog Page
Dome-Top® Barb Ty Cable Ties			
Nylon 6.6, Natural (No Suffix)	Locking Ties/Bundle	BT	B1.45
	Clamp Ties/Mount	BC	B1.48
	Push Mount Ties/Mount	BW	B1.50
	Marker Ties/Identify	BF, BM, B2M, B3M, B4M	B1.52
Weather Resistant Nylon 6.6, Black (0)	Locking Ties/Bundle	BT	B1.46
	Clamp Ties/Mount	BC	B1.49
	Push Mount Ties/Mount	BW, BP	B1.50,51
	Marker Ties/Identify	BF, BM, B2M, B3M, B4M	B1.52
Heat Stabilized Nylon 6.6, Black (30)	Locking Ties/Bundle	BT	B1.47
	Clamp Ties/Mount	BC	B1.49
Heat Stabilized Nylon 6.6, Natural (39)	Locking Ties/Bundle	BT	B1.47
Dura-Ty™ Cable Ties, Strapping, and Kits			
Weather Resistant Acetal, Black	Locking Ties/Bundle	DT	B1.53

Part Number System for Dome-Top® Barb Ty and Dura-Ty™ Cable Ties

BT **2** **S** — **C**

Type

BT = Locking Tie
BC = Clamp Tie
BF = Flag Tie
BM = Marker Tie
BP = Push Mount Tie
BW = Wing Push Mount Tie
DT = Locking Tie

Size

Approx. Maximum Bundle Dia. (In.)

Cross Section

M = Miniature
I = Intermediate
S = Standard
LH = Light-Heavy
H = Heavy
EH = Extra-Heavy

Screw Hole Size

(Clamp Ties Only)
-S4 = #4 (M2.5)
-S6 = #6 (M3)
-S8 = #8 (M4)
-S10 = #10 (M5)
-S25 = 1/4 (M6)

Package Size

Q = 25
L = 50
C = 100
TL = 250
D = 500
M = 1000
LR = 50' Reel

Material/Color

See Page B1.54

Order number of pieces required, in multiples of Standard Package Quantity.

Prime items appear in **BOLD**.

Courtesy of Steven Engineering, Inc.-230 Ryan Way, South San Francisco, CA 94080-6370-Main Office: (650) 588-9200-Outside Local Area: (800) 258-9200-www.stevenengineering.com

Stackable Aerial Cable Spacer – Weather Resistant Polypropylene

- Greater resistance to damage caused by ultraviolet light – indoor or outdoor use
- Each spacer snaps into another to increase spacer heights by 1/2" increments
- Designed for use in parallel or perpendicular applications
- For use with Dura-Ty™ Cable Ties shown on the previous page

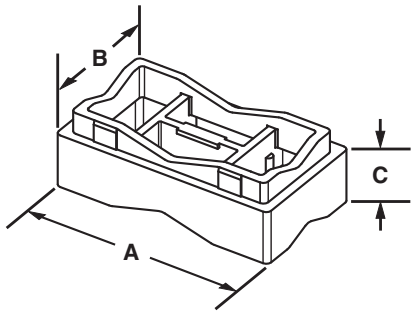

Part Number	Length A		Width B		Height C		Used with Cable Ties*	Std. Pkg. Qty.	Std. Ctn. Qty.
	In.	mm	In.	mm	In.	mm			
SACS5-T100	2.08	52.8	1.16	29.5	.71	18.0	LH, H, EH	200	2000

*Cable tie cross section sizes: LH = Light-Heavy, H = Heavy, and EH = Extra-Heavy.

Dome-Top® Barb Ty and Dura-Ty™ Cable Ties

Material and Color Chart

Material	Color	Panduit Suffix
Nylon 6.6	Natural	✓
Weather Resistant Nylon 6.6	Black	0
Nylon 6.6	Brown	1
Nylon 6.6	Red	2
Nylon 6.6	Orange	3
Nylon 6.6	Yellow	4Y
Nylon 6.6	Green	5
Nylon 6.6	Blue	6

Material	Color	Panduit Suffix
Nylon 6.6	Purple	7
Nylon 6.6	Gray	8
Nylon 6.6	White	10
Nylon 6.6	Telephone Gray	14
Nylon 6.6	Black	20
Heat Stabilized Nylon 6.6	Black	30
Heat Stabilized Nylon 6.6	Natural	39
Flame Retardant Nylon 6.6	Natural (Ivory)	69
Weather Resistant Acetal	Black	*

✓Denotes Panduit Natural Nylon 6.6 (no suffix).
*Denotes Dura-Ty™ Weather Resistant Acetal material (no suffix).

Courtesy of Steven Engineering, Inc.-230 Ryan Way, South San Francisco, CA 94080-6370-Main Office: (650) 588-9200-Outside Local Area: (800) 258-9200-www.stevenengineering.com

Part Number Availability List

Standard Packaging			Bulk Packaging		
Part Number	Natural Nylon 6.6	Material/Color Suffix	Part Number	Natural Nylon 6.6	Material/Color Suffix
			BC1M-S4-M	✓	0
			BC2M-S4-M	✓	0
			BC1.5I-S8-M	✓	0
BC2S-S10-C	✓	0	BC2S-S10-D	✓	0
			BC3S-S10-D	✓	0
BC4S-S10-C	✓	0	BC4S-S10-D	✓	0,30
BC4LH-S25-L	✓	0	BC4LH-S25-TL	✓	0
BF1M-C	✓		BF1M-M	✓	0
BF2M-C	✓		BF2M-M	✓	0
BM1M-C	✓		BM1M-M	✓	0
BM2M-C	✓		BM2M-M	✓	0
BM2S-C	✓		BM2S-D	✓	0
BM4S-C	✓		BM4S-D	✓	0
			BP2S-D		0
BT1M-C	✓	0,30	BT1M-M	✓	0,1,2,3,4Y,5,6,7,8,10,30,39
			BT1M-XMR	✓	0,30
BT1.5M-C	✓	0	BT1.5M-M	✓	0,30
			BT1.5M-XMR	✓	0,30,69
BT2M-C	✓	0	BT2M-M	✓	0,2,3,4Y,5,6,8,30
BT4M-C	✓	0	BT4M-M	✓	0
BT1.5I-C	✓	0	BT1.5I-M	✓	0,1,2,3,4Y,5,6,7,8,10,30,39
BT2I-C	✓	0	BT2I-M	✓	0,30
BT3I-C	✓	0	BT3I-M	✓	0,14,30
BT4I-C	✓	0	BT4I-M	✓	0,14
BT2S-C	✓	0	BT2S-M	✓	0,1,2,3,4Y,5,6,7,8,10,20,30,39
BT3S-C	✓	0,2	BT3S-M	✓	0,30,39
BT4S-C	✓	0	BT4S-M	✓	0,2,3,4Y,5,6,7,8,10,30,39
BT2LH-L	✓	0	BT2LH-TL	✓	0
BT3LH-L	✓	0	BT3LH-TL	✓	0
BT4LH-L	✓	0	BT4LH-TL	✓	0,30,39
BT5LH-L	✓	0	BT5LH-C	✓	0
BT6LH-L	✓	0	BT6LH-C	✓	0
BT7LH-L	✓	0	BT7LH-C	✓	0
BT8LH-L	✓	0	BT8LH-C	✓	0
BT9LH-L	✓	0	BT9LH-C	✓	0
			BW1.5I-D	✓	
			BW2S-D	✓	0
			BW3S-D	✓	0
			B2M2S-D	✓	0
			B3M2S-TL	✓	0
			B4M2S-TL	✓	0
Dura-Ty™ Cable Ties and Strapping					
DTHEH-Q0, DTHH-Q0		*			
DTKEH-0, DTKH-0		*			
DTREH-LR0		*			
DTRH-LR0		*			
DT4EH-L0		*			
DT8EH-Q0		*			
DT14EH-L0		*	DT14EH-C0		*
DT15EH-L0		*			
DT28EH-C0		*			
DT44EH-C0		*			

*Denotes Dura-Ty™ Weather Resistant Acetal material (no suffix).

Courtesy of Steven Engineering, Inc.-230 Ryan Way, South San Francisco, CA 94080-6370-Main Office: (650) 588-9200-Outside Local Area: (800) 258-9200-www.stevenengineering.com