Intel® IOP321 I/O Processor with Intel® XScale™ Microarchitecture and Integrated PCI-X Launches Performance to New Levels

developer.intel.com

Product Highlights

- 32-bit high-performance CPU (400, 600 MHz) based upon Intel® XScale™ microarchitecture
- Integrated 64-bit PCI-X interface (PCI 1.0A, PCI 2.2)
- 200 MHz DDR SDRAM with ECC (1 GB of 64-bit memory, 32-bit mode supported)
- Intel® Superpipelined RISC technology (7-stage integer, 8-stage memory)
- 32 KB data cache, 32 KB instruction cache
- 2 KB mini-data cache
- ARM* Version 5TE compliant
- 32-bit local bus (100 MHz) / Flash I/F
- 1.6 GB/s internal bus (200 MHz)
- 2 DMA channels
- 2 Serial (I2C) + SPI Port
- Application Accelerator Unit with hardware-based XOR capability and 1 Kbyte queue
- Watchdog timer, 2 programmable timers (Auto-reload, programmed duration, selectable prescaling)
- 1024-byte DMA and 4096-byte ATU buffers
- 8 general-purpose I/O pins, 4 SDRAM output clocks, and integrated timers
- Performance Monitoring Unit
- 544L PBGA (35mm)

Single-Chip I/O Processor Based on Intel® XScale™ Technology

The Intel® IOP321 I/O processor is Intel's fifth generation I/O processor. It is the first I/O processor to integrate an Intel® XScale™ microarchitecture core and a PCI-X interface. Many storage, networking, and embedded applications require fast I/O throughput for optimal performance. The IOP321 is a highly integrated, cost-effective I/O system on a chip that delivers a two-fold performance boost over its predecessor, the Intel® IOP310 I/O processor chipset, in I/O-intensive applications.

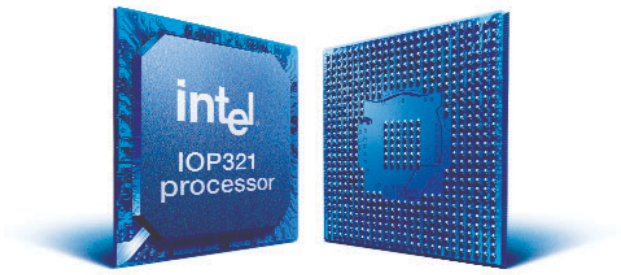

The IOP321 is especially well suited to networked storage applications including RAID (Redundant Array of Independent Disks) adapter cards, ROMB (RAID on motherboard), and other storage applications. Its small package size, high data throughput, and integrated AAU/XOR provide an optimized solution for these applications. In addition, the IOP321 is an ideal choice for applications requiring a high performance I/O subsystem in a tightly-integrated environment.

Product Overview

The IOP321 introduces a powerful combination of technical advancements. The 133 MHz PCI-X interface achieves up to 1 Gbyte per second throughput, a two-fold increase over 66 MHz PCI. The internal bus operates at 200 MHz and offers internal bandwidth of up to 1.6 Gbytes/second. The IOP321 also features a 200 MHz DDR SDRAM controller with ECC that supports up to 1 Gbyte of 64-bit DDR SDRAM, two times that of the previous generation. It contains a 100 MHz, 32-bit local bus that is excellent for embedded applications requiring a connection to non-PCI peripheral components such as ASICs, flash memory, or DSPs.

The IOP321 has additional features that accelerate I/O throughput. A 2-channel DMA controller facilitates increased PCI-to-memory throughput and memory-to-memory throughput. The application accelerator unit contains a hardware-based XOR capability and a 1 Kbyte queue to accelerate RAID-related parity calculations. The application accelerator speeds transfer of read and write data to the memory controller and computes data parity across local memory blocks.

Product Overview (continued)

The IOP321 features a small 544L PBGA (35mm) package. It also integrates 8 GPIO pins, 4 SDRAM output clocks, enhanced interrupt processing, a watchdog timer, and 2 programmable timers. This integration reduces chip count, saves board space, and simplifies designs. The IOP321 is code compatible with the IOP310 I/O processor chipset and the Intel StrongARM* microprocessor (SA-110), simplifying code porting from existing designs. It is compliant with the ARM* Version 5TE instruction set (excluding the floating point instruction set).

As system demands rapidly increase, greater I/O throughput becomes a necessity. The Intel I/O processor family, beginning with the Intel® i960® Rx I/O processors and continuing with the Intel IOP310 and IOP321, aids the developer in accomplishing a significant increase in overall system performance. The IOP321 I/O processor with Intel XScale microarchitecture provides a highly integrated, cost-effective I/O system on a chip that greatly improves I/O performance on current and new server platforms based on the Intel® Pentium® IV, Xeon™, and Itanium™ processors.

Intel® IOP321 I/O Processor Core Opens Floodgates of I/O Throughput

The Intel IOP321 processor is based on the Intel XScale microarchitecture. It integrates Intel® Superpipelined RISC Technology with a 7-stage integer, 8-stage memory super-pipelined core that achieves high speed and low power. The IOP321 is available in two speed grades: 400 MHz and 600 MHz.

The IOP321 core integrates 32 Kbyte data and instruction caches with write-back, write-though, and hit-under-miss capabilities. These large caches greatly improve performance by preventing core stalls caused by multicycle memory accesses. In addition, a 2 KByte mini-data cache is also included to help avoid "thrashing" of the data cache for frequently changing data streams.

This combination of high core speed, larger caches, PCI-X, DDR memory, and a fast internal bus enables the IOP321 to achieve greater data throughput. The IOP321 can efficiently handle a broad spectrum of designs involving storage, networking, and embedded applications.

Integrated PCI-X Bus and 200 MHz Internal Bus Double In Speed and Bandwidth

The Intel IOP321 includes an integrated 64-bit PCI-X interface that achieves a two-fold boost in performance over PCI 2.2 bus technology. This PCI-X interface can be operated at 133 MHz, 100 MHz, and 66 MHz. It is also PCI 2.2 compatible at 33 MHz and 66 MHz (3.3v). The IOP321 internal bus achieves speeds of 200 MHz, offering internal bandwidth of up to 1.6 Gbytes/second. The IOP321 can realize a two-fold performance improvement over the previous generation I/O processor in I/O-intensive applications.

32-bit Local Bus Offers Increased Design Options

The IOP321 offers a 32-bit local bus that provides an interface to external components that do not reside on the PCI bus. It is excellent for embedded applications that need a non-PCI-X attach point to the processor such as ASICs, DSPs, or other peripherals. Six chip selects are available to provide expandability. The local bus is programmable at 8, 16, and 32 bits and functions at 33 MHz, 66 MHz, and 100 MHz speeds.

200 MHz DDR SDRAM Improves Memory Throughput

The 200 MHz DDR SDRAM memory controller acts as an interface between the IOP321 and local memory. It supports up to 1 Gbyte of 64-bit DDR and up to 512 Mbytes of 32-bit DDR. It also supports single-bit error correction and multi-bit detection support from ECC, signaling the culmination of a significant effort to improve memory performance.

The Intel IOP321 Offers Increased I/O Flexibility

The IOP321 offers the flexibility to interface with a wide variety of different interconnect technologies, including SCSI, Fibre Channel, SATA, IB, and Gbit Ethernet. This enables the same code base to be used across multiple applications, reducing development costs and enhancing time-to-market.

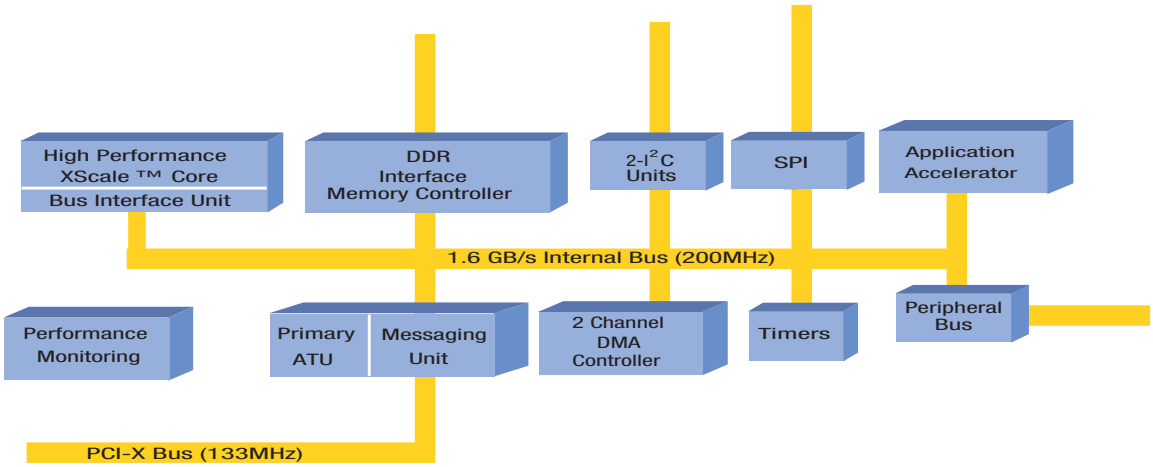

Intel® IOP321 I/O Processor Block Diagram

Features and Benefits

Features	Benefits
■ 400, 600 MHz Intel® XScale™ Core	High-performance with low power
■ Integrated, System-On-A-Chip Design	Smaller packaging, board space cost savings
■ 133 MHz PCI-X Interface	Industry Standard I/O Bus
■ 200 MHz DDR SDRAM Bus	Higher memory performance
■ Up to 1GB memory support	Supports large memory subsystems
■ 1.6 GB/s Internal Bus	Overall performance boost
■ 32-bit Local Bus	Excellent for embedded applications requiring non-PCI-X peripherals such as ASICs, DSPs, or flash
■ 8 GPIOs ■ 4 SDRAM Output Clocks ■ 2 Programmable Timers	Reduces chip count Saves board space Simplifies design
■ AAU/XOR	Integrated data protection for RAID; cuts board cost/space

Product Ordering Information

Intel® 80321Product Order Code:

FW80321M400 Q466 (MM#850685) B-1 (General Customer Samples)
FW80321M600 Q467 (MM#850687) B-1 (General Customer Samples)
FW80321M400 SL6R2 (MM#850666) B-1 (Production Units)
FW80321M600 SL6R3 (MM#850667) B-1 (Production Units)

Evaluation Kit Product Code:

IQ80321KB1.DOM (MM#851484)
IQ80321KB1.INT (MM#851403)

Intel® I/O Processor Literature

Product Briefs:

273357 Intel® 80303 I/O Processor Product and Evaluation Board Brief

273426 Intel® 80310 I/O Processor Chipset Product Brief

273xxx Intel® 80310 I/O Processor Chipset Eval. Board Brief

273427 Intel® 80200 Processor Product Brief

273525 Intel® 80321 I/O Processor Product Brief

Data Sheets:

273358 Intel® 80303 I/O Processor

273355 Intel® 80303 I/O Processor Specification Update

273414 Intel® 80200 Processor

273415 Intel® 80200 Processor Specification Update

273358 Intel® 80312 I/O Companion Chip

273355 Intel® 80312 I/O Companion Chip Specification Update

273518 Intel® 80321 I/O Processor

273519 Intel® 80321 I/O Processor Specification Update

Manuals/Guides:

273353 Intel® 80303 I/O Processor Developer's Manual

273308 Intel® 80303 I/O Processor Design Guide

273401 Intel® IQ80303 Evaluation Board Manual

273411 Intel® 80200 Processor Developer's Manual

273410 Intel® 80312 I/O Companion Chip Developer's Manual

273354 Intel® 80310 I/O Processor Chipset Design Guide

273431 Intel® IQ80310 Evaluation Board Manual

273517 Intel® 80321 I/O Processor Developer's Manual

273520 Intel® 80321 I/O Processor Design Guide

273521 Intel® IQ80321 Evaluation Board Manual

Application Notes:

273570 Intel® 80321 Design Review Checklist

273522 Intel® 80321 Initialization Document

273523 Software Considerations When Migrating From the 80303 to the 80321

273524 Migrating From the 80310 to the 80321

Intel I/O Processor Comparison

	Intel® IOP321 I/O Processor	Intel® IOP310 I/O Processor Chipset
Intel® XScale™ Core	Integrated (single-chip design)	External (two-chip chipset)
Core Speed	400 MHz, 600 MHz	400 MHz, 600 MHz, 733 MHz
Chip Count	1 Chip Solution	2 Chip Solution (80200 & 80312)
Package Size	35mm x 35mm	42.5mm x 42.5mm (80312) and 21mm x 21mm (80200)
I/O Bus Speed / Bandwidth	133 MHz, 64-bit PCI-X Interface Up to 1 GB/s potential throughput	66 MHz, 64-bit PCI - PCI Bridge Up to 512 MB/s potential throughput
Memory Controller Frequency / Amount Supported	200 MHz DDR SDRAM Up to 1Gigabyte of 64-bit DDR SDRAM	100 MHz SDRAM Up to 512 Mbytes of 64-bit SDRAM
Internal Bus Frequency	200 MHz (1.6 GB/s)	100 MHz (800 MB/s)
Local Bus Width	32 Bits (up to 100 MHz)	8 Bits (asynchronous bus)
DMA Buffer Size	1024 Bytes	256 Bytes
ATU Buffer Size	4096 Bytes	512 Bytes
Application Accelerator w/XOR capability	512 - 1K Bytes (user programmable)	512 - 1K Bytes (user programmable)
I^2C Bus Interface Unit	2 Serial Units	1 Serial Unit
Timers	2 Integrated, Programmable	External
GPIO Pins	8 Pins	8 Pins

Intel Access

Developer's Site	developer.intel.com/
I/O Home Page	developer.intel.com/design/iio/
Bridges Home Page	developer.intel.com/design/bridge
Other Intel Support: Intel Literature Center	developer.intel.com/design/litcentr/ (800) 548-4725 7 a.m. to 7 p.m. CST (U.S. and Canada) International locations please contact your local sales office.
General Information Hotline	(800) 628-8686 or (916) 356-3104 5 a.m. to 5 p.m. PST

For more information, visit the Intel Web site at: **developer.intel.com**

UNITED STATES AND CANADA
Intel Corporation
Robert Noyce Bldg.
2200 Mission College Blvd.
P.O. Box 58119
Santa Clara, CA 95052-8119
USA

EUROPE
Intel Corporation (UK) Ltd.
Pipers Way
Swindon
Wiltshire SN3 1RJ
UK

ASIA-PACIFIC
Intel Semiconductor Ltd.
32/F Two Pacific Place
88 Queensway, Central
Hong Kong, SAR

JAPAN
Intel Kabushiki Kaisha
P.O. Box 115 Tsukuba-gakuen
5-6 Tokodai, Tsukuba-shi
Ibaraki-ken 305
Japan

SOUTH AMERICA
Intel Semicondutores do Brazil
Rue Florida, 1703-2 and CJ22
CEP 04565-001 Sao Paulo-SP
Brazil

Part Number: 273699-002 Printed in USA/1202/PDF/IL20701 EW