SYNCHRONOUS DRAM

MT48G8M16LFFF, MT48G8M16LFF4, MT48LC8M16LFFF, MT48LC8M16LFF4, MT48V8M16LFF4, MT48V8M16LFFF MT48LC4M32LFFC, MT48LC4M32LFF5, MT48V4M32LFFC, MT48V4M32LFF5

For the latest data sheet, please refer to the Micron Web site: www.micron.com/dramds

Features

- Temperature Compensated Self Refresh (TCSR)
- Fully synchronous; all signals registered on positive edge of system clock
- Internal pipelined operation; column address can be changed every clock cycle
- Internal banks for hiding row access/precharge
- Programmable burst lengths: 1, 2, 4, 8, or full page
- Auto Precharge, includes CONCURRENT auto precharge, and Auto Refresh Modes
- Self Refresh Mode; standard and low power
- 64ms, 4,096-cycle refresh
- LVTTL-compatible inputs and outputs
- Low voltage power supply
- Partial Array Self Refresh power-saving mode

OPTIONS	MARKING
• VDD/VDDQ	
3.3V/3.3V	LC
3.0V/3.0V[1]	G
2.5V/2.5V – 1.8V	V
• Configurations	
8 Meg x 16 (2 Meg x 16 x 4 banks)	8M16
4 Meg x 32 (1 Meg x 32 x 4 banks)	4M32
• Package/Ball out	
54-ball FBGA (8mm x 9mm)[2]	FF
54-ball FBGA (8mm x 9mm)[2] Lead-Free	BF
54-ball VFBGA (8mm x 8mm)[2]	F4
54-ball VFBGA (8mm x 8mm)[2] Lead-Free	B4
90-ball FBGA (11mm x 13mm)[3]	FC
90-ball FBGA (11mm x 13mm)[3] Lead-Free	BC
90-ball VFBGA (8mm x 13mm)[3]	F5
90-ball VFBGA (8mm x 13mm)[3] Lead-Free	B5
• Timing (Cycle Time)	
8ns @ CL = 3 (125 MHz)	-8
10ns @ CL = 3 (100 MHz)	-10
• Temperature	
Commercial (0°C to +70°C)	None
Industrial (-40°C to +85°C)	IT
Extended (-25°C to +75°C)	XT

NOTE:
1. Check with factory for configuration and availability.
2. x16 Only.
3. x32 Only.

Figure 1: Pin Assignment (Top View) 54-Ball FBGA

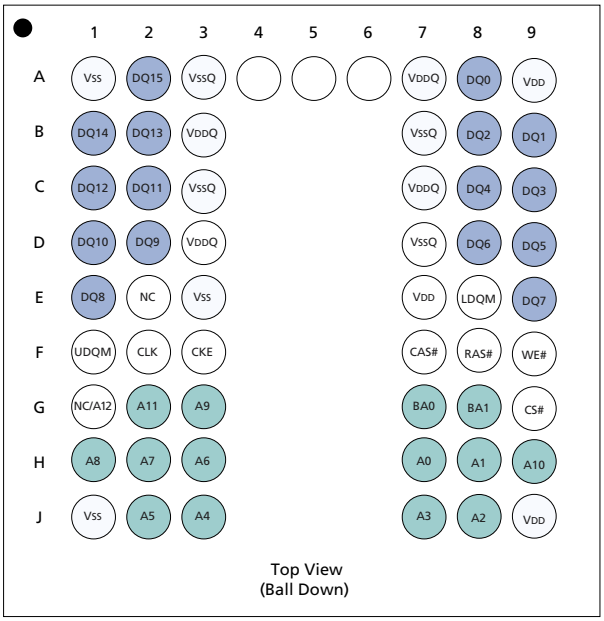

	8 Meg x 16	4 Meg x 32
Configuration	2 Meg x 16 x 4 banks	1 Meg x 32 x 4 banks
Refresh Count	4K	4K
Row Addressing	4K (A0–A11)	4K (A0–A11)
Bank Addressing	4 (BA0, BA1)	4 (BA0, BA1)
Column Addressing	512 (A0–A8)	256 (A0–A7)

Part Number Example:

MT48V8M16LFFF-8

Table 1: Key Timing Parameters

SPEED GRADE	CLOCK FREQUENCY	ACCESS TIME			^tRCD	^tRP
		CL=1*	CL=2*	CL=3*		
-8	125 MHz	–	–	7ns	20ns	20ns
-10	100 MHz	–	–	7ns	20ns	20ns
-8	100 MHz	–	8ns	–	20ns	20ns
-10	83 MHz	–	8ns	–	20ns	20ns
-8	50 MHz	19ns	–	–	20ns	20ns
-10	40 MHz	22ns	–	–	20ns	20ns

*CL = CAS (READ) latency

©2001 Micron Technology, Inc. All rights reserved.

Table of Contents

Features 1
General Description 6
Functional Description 11
Initialization 11
Register Definition 11
Mode Register 11
Burst Length 11
Burst Type 12
CAS Latency 13
Operating Mode 13
Extended Mode Register 13
Temperature Compensated Self Refresh 14
Partial Array Self Refresh 14
Commands 15
Command Inhibit 16
NO Operation (NOP) 16
LOAD mode register 16
ACTIVE 16
READ 16
WRITE 16
PRECHARGE 16
Auto Precharge 16
BURST TERMINATE 17
AUTO REFRESH 17
SELF REFRESH 17
Operation 18
BANK/ROW ACTIVATION 18
READs 19
WRITEs 25
PRECHARGE 27
POWER-DOWN 27
CLOCK SUSPEND 28
BURST READ/SINGLE WRITE 28
CONCURRENT Auto Precharge 29
Absolute Maximum Ratings 36
Notes 42

Micron Technology, Inc., reserves the right to change products or specifications without notice.
©2001 Micron Technology, Inc. All rights reserved.

List of Figures

Figure 1: Pin Assignment (Top View) 54-Ball FBGA . . . 1
Figure 2: 90-Ball FBGA Pin Assignment (Top View) . . . 5
Figure 3: Functional Block Diagram 8 Meg x 16 SDRAM . . . 7
Figure 4: Functional Block Diagram 4 Meg x 32 SDRAM . . . 8
Figure 5: Mode Register Definition . . . 12
Figure 6: CAS Latency . . . 13
Figure 7: Extended Mode Register . . . 13
Figure 8: Activating a Specific Row in a Specific Bank . . . 18
Figure 9: Example: Meeting tRCD (MIN) When 2 < tRCD (MIN)/tCK< 3 . . . 18
Figure 10: READ Command . . . 19
Figure 11: CAS Latency . . . 19
Figure 12: Consecutive READ Bursts . . . 20
Figure 13: Random READ Accesses . . . 21
Figure 14: READ to WRITE . . . 22
Figure 15: READ to WRITE with Extra Clock Cycle . . . 22
Figure 16: READ to PRECHARGE . . . 23
Figure 17: Terminating a READ Burst . . . 24
Figure 18: WRITE Command . . . 25
Figure 19: WRITE Burst . . . 25
Figure 20: WRITE to WRITE . . . 25
Figure 21: Random WRITE Cycles . . . 26
Figure 22: WRITE to READ . . . 26
Figure 23: WRITE to PRECHARGE . . . 26
Figure 24: Terminating a WRITE Burst . . . 27
Figure 25: PRECHARGE Command . . . 27
Figure 26: Power-Down . . . 27
Figure 27: Clock Suspend During WRITE Burst . . . 28
Figure 28: Clock Suspend During READ Burst . . . 28
Figure 29: READ With Auto Precharge Interrupted by a READ . . . 29
Figure 30: READ With Auto Precharge Interrupted by a WRITE . . . 29
Figure 31: WRITE With Auto Precharge Interrupted by a READ . . . 30
Figure 32: WRITE With Auto Precharge Interrupted by a WRITE . . . 30
Figure 33: Initialize and Load Mode Register[1,2] . . . 43
Figure 34: Power-down Mode[1] . . . 44
Figure 35: Clock Suspend Mode . . . 45
Figure 36: Auto Refresh Mode . . . 46
Figure 37: Self Refresh Mode . . . 47
Figure 38: READ – Without Auto Precharge1 . . . 48
Figure 39: Read – With Auto Precharge[1] . . . 49
Figure 40: Single Read – Without Auto Precharge[1] . . . 50
Figure 41: Single Read – With Auto Precharge[1] . . . 51
Figure 42: Alternating Bank Read Accesses[1] . . . 52
Figure 43: Read – Full-page Burst[1] . . . 53
Figure 44: Read – DQM Operation[1] . . . 54
Figure 45: Write – Without Auto Precharge[1] . . . 55
Figure 46: Write – With Auto Precharge[1] . . . 56
Figure 47: Single Write – Without Auto Precharge[1] . . . 57
Figure 48: Single Write – With Auto Precharge[1] . . . 58
Figure 49: Alternating Bank Write Accesses[1] . . . 59
Figure 50: Write – Full-page Burst[1] . . . 60
Figure 51: Write – DQM Operation[1] . . . 61
Figure 52: 54-Ball FBGA (8mm x 9mm) . . . 62
Figure 53: 54-Ball VFBGA (8mm x 8mm) . . . 63
Figure 54: 90-Ball FBGA (11mm x 13mm) . . . 64
Figure 55: 90-Ball VFBGA (8mm x 13mm) . . . 65

Micron Technology, Inc., reserves the right to change products or specifications without notice.
©2001 Micron Technology, Inc. All rights reserved.

List of Tables

Table 1: Key Timing Parameters 1
Table 2: 128Mb SDRAM Part Numbers 6
Table 3: Ball Descriptions: 54-Ball VFBGA 9
Table 4: Ball Descriptions: 90-Ball VFBGA 10
Table 5: Burst Definition 12
Table 6: CAS Latency 13
Table 7: Truth Table–Commands and DQM Operation 15
Table 8: Truth Table – CKE 31
Table 9: Truth Table – Current State Bank *n*, Command To Bank *n* *32*
Table 10: Truth Table – CURRENT STATE BANK n, COMMAND TO BANK m 34
Table 11: DC Electrical Characteristics and Operating Conditions (LC Version) 36
Table 12: DC Electrical Characteristics and Operating Conditions (G Version) 36
Table 13: DC Electrical Characteristics and Operating Conditions (V Version) 37
Table 14: Electrical Characteristics and Recommended AC Operating Conditions 38
Table 15: AC Functional Characteristics 39
Table 16: IDD Specifications and Conditions (x16) 40
Table 17: IDD7 Self Refresh Current Options (x16) 40
Table 18: IDD Specifications And Conditions (x32) 41
Table 19: IDD7 Self Refresh Current Options (x32) 41
Table 20: Capacitance 41

Micron Technology, Inc., reserves the right to change products or specifications without notice.
©2001 Micron Technology, Inc. All rights reserved.

Figure 2: 90-Ball FBGA Pin Assignment (Top View)

	1	2	3	4	5	6	7	8	9
A	DQ26	DQ24	VSS				VDD	DQ23	DQ21
B	DQ28	VDDQ	VSSQ				VDDQ	VSSQ	DQ19
C	VSSQ	DQ27	DQ25				DQ22	DQ20	VDDQ
D	VSSQ	DQ29	DQ30				DQ17	DQ18	VDDQ
E	VDDQ	DQ31	NC				NC	DQ16	VSSQ
F	VSS	DQM3	A3				A2	DQM2	VDD
G	A4	A5	A6				A10	A0	A1
H	A7	A8	NC				NC	BA1	A11
J	CLK	CKE	A9				BA0	CS#	RAS#
K	DQM1	NC	NC				CAS#	WE#	DQM0
L	VDDQ	DQ8	VSS				VDD	DQ7	VSSQ
M	VSSQ	DQ10	DQ9				DQ6	DQ5	VDDQ
N	VSSQ	DQ12	DQ14				DQ1	DQ3	VDDQ
P	DQ11	VDDQ	VSSQ				VDDQ	VSSQ	DQ4
R	DQ13	DQ15	VSS				VDD	DQ0	DQ2

Ball and Array

Micron Technology, Inc., reserves the right to change products or specifications without notice.
©2001 Micron Technology, Inc. All rights reserved.

Table 2: 128Mb SDRAM Part Numbers

PART NUMBER	VDD/VDDQ	ARCHITECTURE	PACKAGE
MT48LC8M16LFFF-xx	3.3V / 3.3V	8 Meg x 16	54-BALL FBGA
MT48G8M16LFFF-xx	3.0V / 3.0V	8 Meg x 16	54-BALL FBGA
MT48V8M16LFFF-xx	2.5V / 2.5V - 1.8V	8 Meg x 16	54-BALL FBGA
MT48LC4M32LFFC-xx	3.3V / 3.3V	4 Meg x 32	90-BALL FBGA
MT48V4M32LFFC-xx	2.5V / 2.5V - 1.8V	4 Meg x 32	90-BALL FBGA
MT48LC8M16LFF4-xx	3.3V / 3.3V	8 Meg x 16	54-BALL VFBGA
MT48G8M16LFF4-xx	3.0V / 3.0V	8 Meg x 16	54-BALL VFBGA
MT48V8M16LFF4-xx	2.5V / 2.5V - 1.8V	8 Meg x 16	54-BALL VFBGA
MT48LC4M32LFF5-xx	3.3V / 3.3V	4 Meg x 32	90-BALL FBGA
MT48V4M32LFF5-xx	2.5V / 2.5V - 1.8V	4 Meg x 32	90-BALL FBGA

General Description

The Micron® 128Mb SDRAM is a high-speed CMOS, dynamic random-access memory containing 134,217,728 bits. It is internally configured as a quad-bank DRAM with a synchronous interface (all signals are registered on the positive edge of the clock signal, CLK). Each of the x16's 33,554,432-bit banks is organized as 4,096 rows by 512 columns by 16 bits. Each of the x32's 33,554,432-bit banks is organized as 4,096 rows by 256 columns by 32 bits.

Read and write accesses to the SDRAM are burst oriented; accesses start at a selected location and continue for a programmed number of locations in a programmed sequence. Accesses begin with the registration of an ACTIVE command, which is then followed by a READ or WRITE command. The address bits registered coincident with the ACTIVE command are used to select the bank and row to be accessed (BA0, BA1 select the bank; A0-A11(x16) or A0-A10(x32) select the row). The address bits registered coincident with the READ or WRITE command are used to select the starting column location for the burst access.

The SDRAM provides for programmable read or write burst lengths of 1, 2, 4, or 8 locations, or the full page, with a burst terminate option. An auto precharge function may be enabled to provide a self-timed row precharge that is initiated at the end of the burst sequence.

The 128Mb SDRAM uses an internal pipelined architecture to achieve high-speed operation. This architecture is compatible with the 2*n* rule of prefetch architectures, but it also allows the column address to be changed on every clock cycle to achieve a high-speed, fully random access. Precharging one bank while accessing one of the other three banks will hide the precharge cycles and provide seamless high-speed, random-access operation.

The 128Mb SDRAM is designed to operate in 3.3V or 3.0V or 2.5V low-power memory systems. An auto refresh mode is provided, along with a power-saving, power-down mode. All inputs and outputs are LVTTL-compatible.

SDRAMs offer substantial advances in DRAM operating performance, including the ability to synchronously burst data at a high data rate with automatic column-address generation, the ability to interleave between internal banks in order to hide precharge time and the capability to randomly change column addresses on each clock cycle during a burst access.

Micron Technology, Inc., reserves the right to change products or specifications without notice.
©2001 Micron Technology, Inc. All rights reserved.

Figure 3: Functional Block Diagram 8 Meg x 16 SDRAM

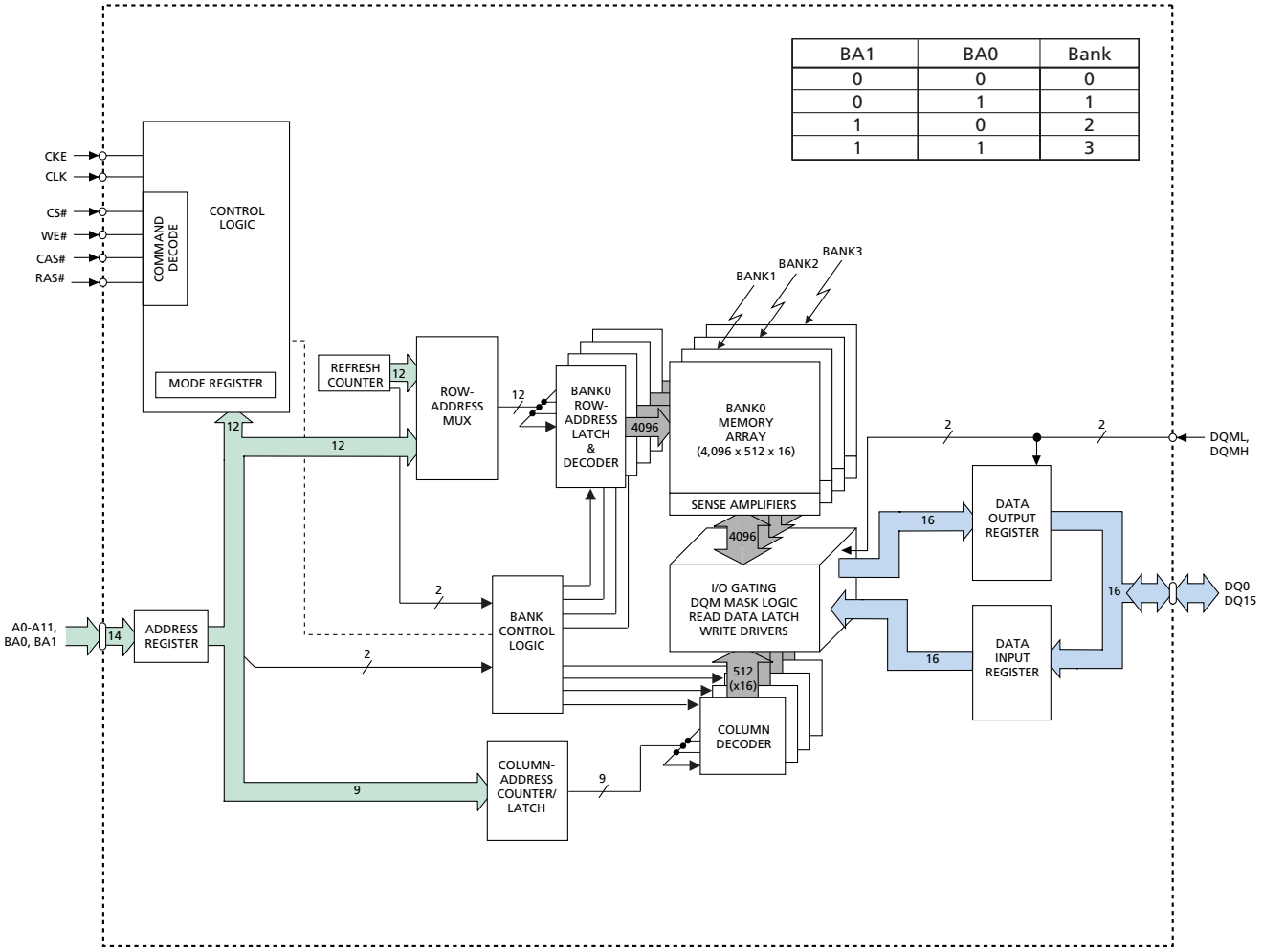

Micron Technology, Inc., reserves the right to change products or specifications without notice.
©2001 Micron Technology, Inc. All rights reserved.

Figure 4: Functional Block Diagram 4 Meg x 32 SDRAM

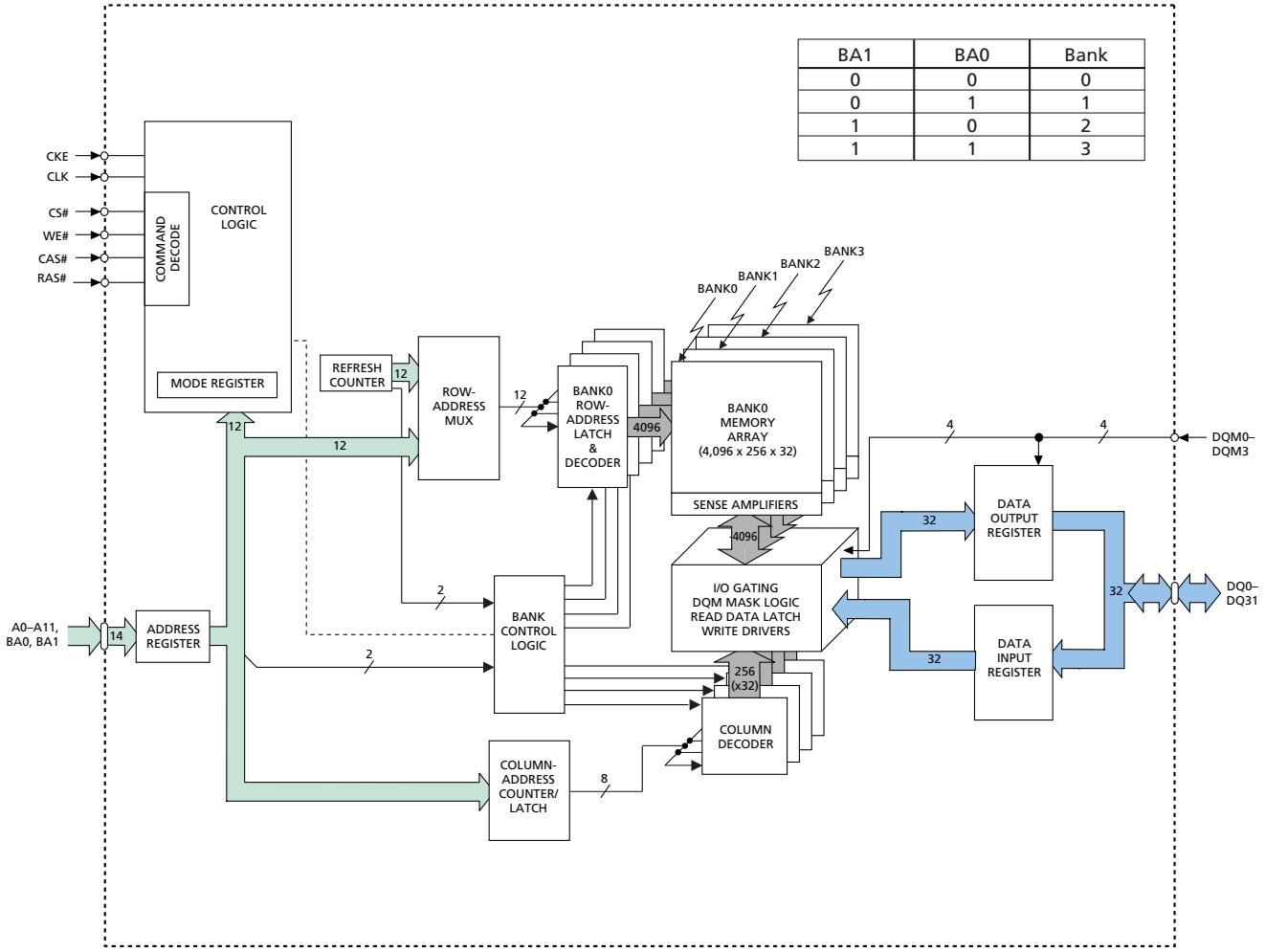

Micron Technology, Inc., reserves the right to change products or specifications without notice.
©2001 Micron Technology, Inc. All rights reserved.

Table 3: Ball Descriptions: 54-Ball VFBGA

54-BALL VFBGA	SYMBOL	TYPE	DESCRIPTION
F2	CLK	Input	Clock: CLK is driven by the system clock. All SDRAM input signals are sampled on the positive edge of CLK. CLK also increments the internal burst counter and controls the output registers.
F3	CKE	Input	Clock Enable: CKE activates (HIGH) and deactivates (LOW) the CLK signal. Deactivating the clock provides PRECHARGE POWER-DOWN and SELF REFRESH operation (all banks idle), ACTIVE POWER-DOWN (row active in any bank) or CLOCK SUSPEND operation (burst/access in progress). CKE is synchronous except after the device enters power-down and self refresh modes, where CKE becomes asynchronous until after exiting the same mode. The input buffers, including CLK, are disabled during power-down and self refresh modes, providing low standby power. CKE may be tied HIGH.
G9	CS#	Input	Chip Select: CS# enables (registered LOW) and disables (registered HIGH) the command decoder. All commands are masked when CS# is registered HIGH. CS# provides for external bank selection on systems with multiple banks. CS# is considered part of the command code.
F7, F8, F9	CAS#, RAS#, WE#	Input	Command Inputs: CAS#, RAS#, and WE# (along with CS#) define the command being entered.
E8, F1	LDQM, UDQM	Input	Input/Output Mask: DQM is sampled HIGH and is an input mask signal for write accesses and an output enable signal for read accesses. Input data is masked during a WRITE cycle. The output buffers are placed in a High-Z state (two-clock latency) when during a READ cycle. LDQM corresponds to DQ0–DQ7, UDQM corresponds to DQ8–DQ15. LDQM and UDQM are considered same state when referenced as DQM.
G7, G8	BA0, BA1	Input	Bank Address Input(s): BA0 and BA1 define to which bank the ACTIVE, READ, WRITE or PRECHARGE command is being applied. These pins also provide the op-code during a LOAD MODE REGISTER command
H7, H8, J8, J7, J3, J2, H3, H2, H1, G3, H9, G2	A0–A11	Input	Address Inputs: A0–A11 are sampled during the ACTIVE command (row-address A0–A11) and READ/WRITE command (column-address A0–A8; with A10 defining auto precharge) to select one location out of the memory array in the respective bank. A10 is sampled during a PRECHARGE command to determine if all banks are to be precharged (A10 HIGH) or bank selected by BA0, BA1 (LOW). The address inputs also provide the op-code during a LOAD MODE REGISTER command.
A8, B9, B8, C9, C8, D9, D8, E9, E1, D2, D1, C2, C1, B2, B1, A2	DQ0–DQ15	I/O	Data Input/Output: Data bus
E2, G1	NC	–	No Connect: These pins should be left unconnected. G1 is a no connect for this part but may be used as A12 in future designs.
A7, B3, C7, D3	$V_{DD}Q$	Supply	DQ Power: Isolated DQ power on the die to improve noise immunity.
A3, B7, C3, D7,	$V_{SS}Q$	Supply	DQ Ground: Isolated DQ power on the die to improve noise immunity.
A9, E7, J9	V_{DD}	Supply	Power Supply: Voltage dependant on option.
A1, E3, J1	V_{SS}	Supply	Ground.

Micron Technology, Inc., reserves the right to change products or specifications without notice.
©2001 Micron Technology, Inc. All rights reserved.

Table 4: Ball Descriptions: 90-Ball VFBGA

90-BALL FBGA	SYMBOL	TYPE	DESCRIPTION
J1	CLK	Input	Clock: CLK is driven by the system clock. All SDRAM input signals are sampled on the positive edge of CLK. CLK also increments the internal burst counter and controls the output registers.
J2	CKE	Input	Clock Enable: CKE activates (HIGH) and deactivates (LOW) the CLK signal. Deactivating the clock provides PRECHARGE POWER-DOWN and SELF REFRESH operation (all banks idle), ACTIVE POWER-DOWN (row active in any bank) or CLOCK SUSPEND operation (burst/access in progress). CKE is synchronous except after the device enters power-down and self refresh modes, where CKE becomes asynchronous until after exiting the same mode. The input buffers, including CLK, are disabled during power-down and self refresh modes, providing low standby power. CKE may be tied HIGH.
J8	CS#	Input	Chip Select: CS# enables (registered LOW) and disables (registered HIGH) the command decoder. All commands are masked when CS# is registered HIGH. CS# provides for external bank selection on systems with multiple banks. CS# is considered part of the command code.
J9, K7, K8	RAS#, CAS#, WE#	Input	Command Inputs: RAS#, CAS#, and WE# (along with CS#) define the command being entered.
K9, K1, F8, F2	DQM0–3	Input	Input/Output Mask: DQM is sampled HIGH and is an input mask signal for write accesses and an output enable signal for read accesses. Input data is masked during a WRITE cycle. The output buffers are placed in a High-Z state (two-clock latency) when during a READ cycle. DQM0 corresponds to DQ0–DQ7, DQM1 corresponds to DQ8–DQ15, DQM2 corresponds to DQ16–DQ23 and DQM3 corresponds to DQ24–DQ31. DQM0-3 are considered same state when referenced as DQM.
J7, H8	BA0, BA1	Input	Bank Address Input(s): BA0 and BA1 define to which bank the ACTIVE, READ, WRITE or PRECHARGE command is being applied. These pins also provide the op-code during a LOAD MODE REGISTER command
G8, G9, F7, F3, G1, G2, G3, H1, H2, J3, G7, H9	A0–A11	Input	Address Inputs: A0–A11 are sampled during the ACTIVE command (row-address A0–A11) and READ/WRITE command (column-address A0–A7; with A10 defining auto precharge) to select one location out of the memory array in the respective bank. A10 is sampled during a PRECHARGE command to determine if all banks are to be precharged (A10 HIGH) or bank selected by BA0, BA1 (LOW). The address inputs also provide the op-code during a LOAD MODE REGISTER command.
R8, N7, R9, N8, P9, M8, M7, L8, L2, M3, M2, P1, N2, R1, N3, R2, E8, D7, D8, B9, C8, A9, C7, A8, A2, C3, A1, C2, B1, D2, D3, E2	DQ0–DQ31	I/O	Data Input/Output: Data bus
E3, E7, H3, H7, K2, K3	NC	–	No Connect: These pins should be left unconnected. H7 is a no connect for this part but may be used as A12 in future designs.
B2, B7, C9, D9, E1, L1, M9, N9, P2, P7	V_{DDQ}	Supply	DQ Power: Isolated DQ power on the die to improve noise immunity.
B8, B3, C1, D1, E9, L9, M1, N1, P3, P8	V_{SSQ}	Supply	DQ Ground: Isolated DQ power on the die to improve noise immunity.
A7, F9, L7, R7	V_{DD}	Supply	Power Supply: Voltage dependant on option.
A3, F1, L3, R3	V_{SS}	Supply	Ground.

Micron Technology, Inc., reserves the right to change products or specifications without notice.
©2001 Micron Technology, Inc. All rights reserved.

Functional Description

In general, the 128Mb SDRAMs (2 Meg x16 x 4 banks and 1 Meg x 32 x 4 banks) are quad-bank DRAMs that operate at 3.3V or 2.5V and include a synchronous interface (all signals are registered on the positive edge of the clock signal, CLK). Each of the x16's 33,554,432-bit banks is organized as 4,096 rows by 512 columns by 16 bits. Each of the x32's 33,554,432-bit banks is organized as 4,096 rows by 256 columns by 32bits.

Read and write accesses to the SDRAM are burst oriented; accesses start at a selected location and continue for a programmed number of locations in a programmed sequence. Accesses begin with the registration of an ACTIVE command, which is then followed by a READ or WRITE command. The address bits registered coincident with the ACTIVE command are used to select the bank and row to be accessed (BA0 and BA1 select the bank, A0-A11 select the row). The address bits (x16: A0-A8; x32: A0-A7) registered coincident with the READ or WRITE command are used to select the starting column location for the burst access.

Prior to normal operation, the SDRAM must be initialized. The following sections provide detailed information covering device initialization, register definition, command descriptions and device operation.

Initialization

SDRAMs must be powered up and initialized in a predefined manner. Operational procedures other than those specified may result in undefined operation. Once power is applied to Vdd and VddQ (simultaneously) and the clock is stable (stable clock is defined as a signal cycling within timing constraints specified for the clock pin), the SDRAM requires a 100µs delay prior to issuing any command other than a COMMAND INHIBIT or NOP. Starting at some point during this 100µs period and continuing at least through the end of this period, Command Inhibit or NOP commands should be applied.

Once the 100µs delay has been satisfied with at least one Command Inhibit or NOP command having been applied, a PRECHARGE command should be applied. All banks must then be precharged, thereby placing the device in the all banks idle state.

Once in the idle state, two AUTO refresh cycles must be performed. After the AUTO refresh cycles are complete, the SDRAM is ready for mode register programming. Because the mode register will power up in an unknown state, it should be loaded prior to applying any operational command.

Register Definition

Mode Register

In order to achieve low power consumption, there are two mode registers in the Mobile component, Mode Register and Extended Mode Register. For this section, Mode Register is referred to. Extended Mode register is discussed on 14. The mode register is used to define the specific mode of operation of the SDRAM. This definition includes the selection of a burst length, a burst type, a CAS latency, an operating mode and a write burst mode, as shown in Figure 5. The mode register is programmed via the LOAD MODE REGISTER command and will retain the stored information until it is programmed again or the device loses power.

Mode Register bits M0-M2 specify the burst length, M3 specifies the type of burst (sequential or interleaved), M4-M6 specify the CAS latency, M7 and M8 specify the operating mode, M9, M10, and M11 should be set to zero. M12 and M13 should be set to zero to prevent extended mode register.

The mode register must be loaded when all banks are idle, and the controller must wait the specified time before initiating the subsequent operation. Violating either of these requirements will result in unspecified operation.

Burst Length

Read and write accesses to the SDRAM are burst oriented, with the burst length being programmable, as shown in Figure 5. The burst length determines the maximum number of column locations that can be accessed for a given READ or WRITE command. Burst lengths of 1, 2, 4, or 8 locations are available for both the sequential and the interleaved burst types, and a full-page burst is available for the sequential type. The full-page burst is used in conjunction with the BURST TERMINATE command to generate arbitrary burst lengths.

Reserved states should not be used, as unknown operation or incompatibility with future versions may result.

When a READ or WRITE command is issued, a block of columns equal to the burst length is effectively selected. All accesses for that burst take place within this block, meaning that the burst will wrap within the block if a boundary is reached. The block is uniquely selected by A1-A8 (x16) or A1-A7 (x32) when the burst length is set to two; by A2-A8 (x16) or A2-A7 (x32) when the burst length is set to four; and by A3-A8 (x16) or A3-A7 (x32) when the burst length is set to eight. The

Micron Technology, Inc., reserves the right to change products or specifications without notice.
©2001 Micron Technology, Inc. All rights reserved.

remaining (least significant) address bit(s) is (are) used to select the starting location within the block. Full-page bursts wrap within the page if the boundary is reached.

Burst Type

Accesses within a given burst may be programmed to be either sequential or interleaved; this is referred to as the burst type and is selected via bit M3.

The ordering of accesses within a burst is determined by the burst length, the burst type and the starting column address, as shown in Table 1.

Figure 5: Mode Register Definition

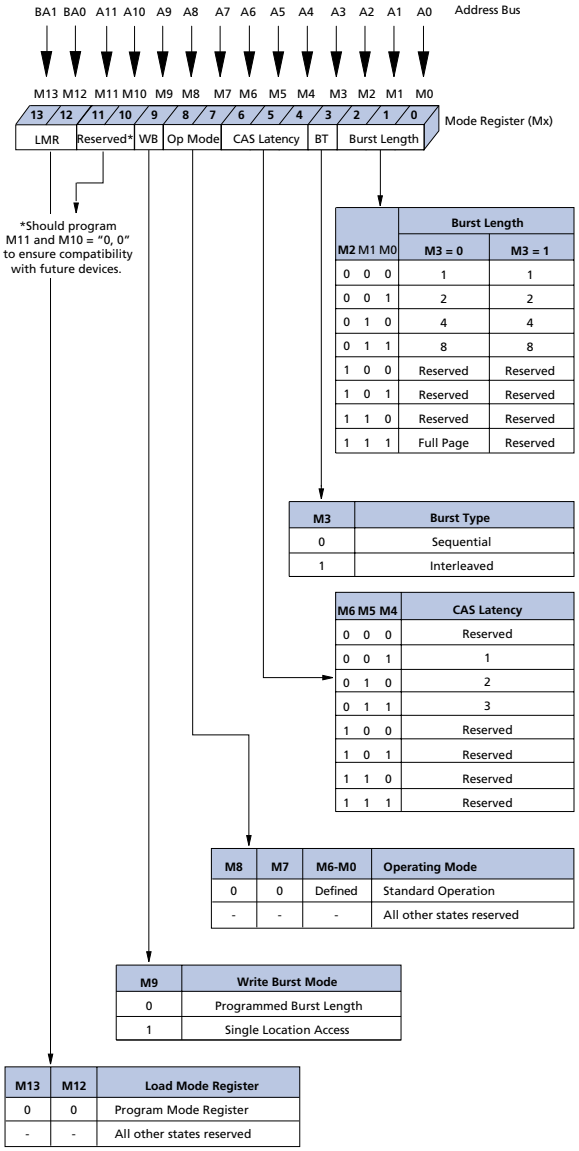

M2 M1 M0	Burst Length M3 = 0	Burst Length M3 = 1
0 0 0	1	1
0 0 1	2	2
0 1 0	4	4
0 1 1	8	8
1 0 0	Reserved	Reserved
1 0 1	Reserved	Reserved
1 1 0	Reserved	Reserved
1 1 1	Full Page	Reserved

M3	Burst Type
0	Sequential
1	Interleaved

M6 M5 M4	CAS Latency
0 0 0	Reserved
0 0 1	1
0 1 0	2
0 1 1	3
1 0 0	Reserved
1 0 1	Reserved
1 1 0	Reserved
1 1 1	Reserved

M8	M7	M6-M0	Operating Mode
0	0	Defined	Standard Operation
-	-	-	All other states reserved

M9	Write Burst Mode
0	Programmed Burst Length
1	Single Location Access

M13	M12	Load Mode Register
0	0	Program Mode Register
-	-	All other states reserved

Table 5: Burst Definition

BURST LENGTH	STARTING COLUMN ADDRESS			ORDER OF ACCESSES WITHIN A BURST: TYPE = SEQUENTIAL	ORDER OF ACCESSES WITHIN A BURST: TYPE = INTERLEAVED
2			A0		
			0	0-1	0-1
			1	1-0	1-0
4		A1	A0		
		0	0	0-1-2-3	0-1-2-3
		0	1	1-2-3-0	1-0-3-2
		1	0	2-3-0-1	2-3-0-1
		1	1	3-0-1-2	3-2-1-0
8	A2	A1	A0		
	0	0	0	0-1-2-3-4-5-6-7	0-1-2-3-4-5-6-7
	0	0	1	1-2-3-4-5-6-7-0	1-0-3-2-5-4-7-6
	0	1	0	2-3-4-5-6-7-0-1	2-3-0-1-6-7-4-5
	0	1	1	3-4-5-6-7-0-1-2	3-2-1-0-7-6-5-4
	1	0	0	4-5-6-7-0-1-2-3	4-5-6-7-0-1-2-3
	1	0	1	5-6-7-0-1-2-3-4	5-4-7-6-1-0-3-2
	1	1	0	6-7-0-1-2-3-4-5	6-7-4-5-2-3-0-1
	1	1	1	7-0-1-2-3-4-5-6	7-6-5-4-3-2-1-0
Full Page (y)	n = A0-A11/ 9/8 (location 0-y)			Cn, Cn + 1, Cn + 2 Cn + 3, Cn + 4... ...Cn - 1, Cn...	Not Supported

NOTE:
1. For full-page accesses: y = 512 (x16), y = 256 (x32).
2. For a burst length of two, A1-A8 (x16) or A1-A7 (x32) select the block-of-two burst; A0 selects the starting column within the block.
3. For a burst length of four, A2-A8 (x16) or A2-A7 (x32) select the block-of-four burst; A0-A1 select the starting column within the block.
4. For a burst length of eight, A3-A8 (x16) or A3-A7 (x32) select the block-of-eight burst; A0-A2 select the starting column within the block.
5. For a full-page burst, the full row is selected and A0-A8 (x16) or A0-A7 (x32) select the starting column.
6. Whenever a boundary of the block is reached within a given sequence above, the following access wraps within the block.
7. For a burst length of one, A0-A8 (x16) or A0-A7 (x32) select the unique column to be accessed, and mode register bit M3 is ignored.

Micron Technology, Inc., reserves the right to change products or specifications without notice.
©2001 Micron Technology, Inc. All rights reserved.

CAS Latency

The CAS latency is the delay, in clock cycles, between the registration of a READ command and the availability of the first piece of output data. The latency can be set to one, two, or three clocks.

If a READ command is registered at clock edge *n*, and the latency is *m* clocks, the data will be available by clock edge *n* + *m*. The DQs will start driving as a result of the clock edge one cycle earlier (*n* + *m* - 1), and provided that the relevant access times are met, the data will be valid by clock edge *n* + *m*. For example, assuming that the clock cycle time is such that all relevant access times are met, if a read command is registered at T0 and the latency is programmed to two clocks, the DQs will start driving after T1 and the data will be valid by T2, as shown in Figure 6. Table 6 indicates the operating frequencies at which each CAS latency setting can be used.

Reserved states should not be used as unknown operation or incompatibility with future versions may result.

Figure 6: CAS Latency

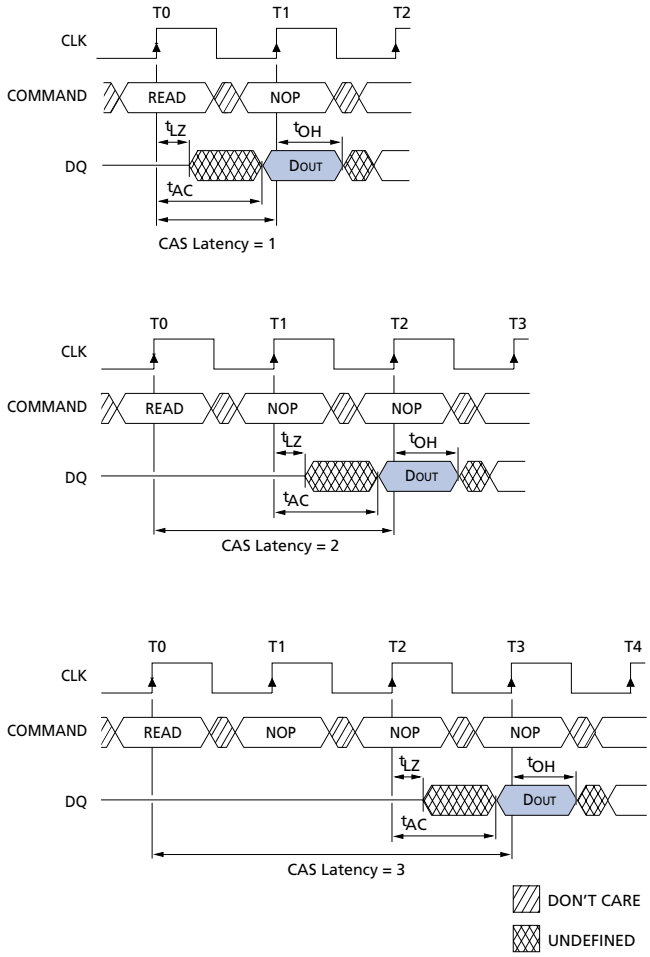

Operating Mode

The normal operating mode is selected by setting M7 and M8 to zero; the other combinations of values for M7 and M8 are reserved for future use and/or test modes. The programmed burst length applies to both read and write bursts.

Test modes and reserved states should not be used because unknown operation or incompatibility with future versions may result.

Extended Mode Register

The Extended Mode Register controls the functions beyond those controlled by the Mode Register. These additional functions are special features of the Mobile device. They include Temperature Compensated Self Refresh (TCSR) Control, and Partial Array Self Refresh (PASR).

Table 6: CAS Latency

SPEED	ALLOWABLE OPERATING FREQUENCY (MHZ)		
	CAS LATENCY = 1	CAS LATENCY = 2	CAS LATENCY = 3
- 8	≤ 50	≤ 100	≤ 125
- 10	≤ 40	≤ 83	≤ 100

Figure 7: Extended Mode Register

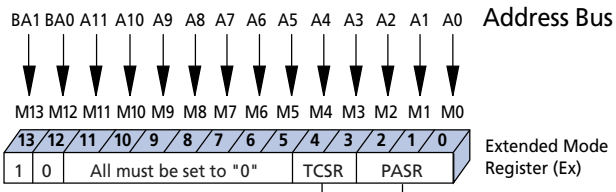

A4	A3	Maximum Case Temp
1	1	85°C
0	0	70°C
0	1	45°C
1	0	15°C

A2	A1	A0	Self Refresh Coverage
0	0	0	Four Banks
0	0	1	Two Banks (Bank 0,1)
0	1	0	One Bank (Bank 0)
0	1	1	RFU
1	0	0	RFU
1	0	1	RFU
1	1	0	RFU
1	1	1	RFU

Micron Technology, Inc., reserves the right to change products or specifications without notice.
©2001 Micron Technology, Inc. All rights reserved.

The Extended Mode Register is programmed via the Mode Register Set command (BA1=1,BA0=0) and retains the stored information until it is programmed again or the device loses power.

The Extended Mode Register must be programmed with M5 through M11 set to "0". The Extended Mode Register must be loaded when all banks are idle and no bursts are in progress, and the controller must wait the specified time before initiating any subsequent operation. Violating either of these requirements results in unspecified operation. The Extended Mode Register must be programmed in order to ensure proper operation.

Temperature Compensated Self Refresh

Temperature Compensated Self Refresh (TCSR) allows the controller to program the Refresh interval during SELF REFRESH mode, according to the case temperature of the Mobile device. This allows great power savings during SELF REFRESH during most operating temperature ranges. Only during extreme temperatures would the controller have to select a TCSR level that will guarantee data during SELF REFRESH.

Every cell in the DRAM requires refreshing due to the capacitor losing its charge over time. The refresh rate is dependent on temperature. At higher temperatures a capacitor loses charge quicker than at lower temperatures, requiring the cells to be refreshed more often. Historically, during Self Refresh, the refresh rate has been set to accommodate the worst case, or highest temperature range expected.

Thus, during ambient temperatures, the power consumed during refresh was unnecessarily high, because the refresh rate was set to accommodate the higher temperatures. Setting M4 and M3, allow the DRAM to accommodate more specific temperature regions during SELF REFRESH. There are four temperature settings, which will vary the SELF REFRESH current according to the selected temperature. This selectable refresh rate will save power when the DRAM is operating at normal temperatures.

Partial Array Self Refresh

For further power savings during SELF REFRESH, the Partial Array Self Refresh (PASR) feature allows the controller to select the amount of memory that will be refreshed during SELF REFRESH. The refresh options are all banks (banks 0, 1, 2, and 3); two banks (banks 0 and 1); and one bank (bank 0). WRITE and READ commands occur to any bank selected during standard operation, but only the selected banks in PASR will be refreshed during SELF REFRESH. It's important to note that data in banks 2 and 3 will be lost when the two bank option is used. Data will be lost in banks 1, 2, and 3 when the one bank option is used.

Micron Technology, Inc., reserves the right to change products or specifications without notice.
©2001 Micron Technology, Inc. All rights reserved.

Commands

Truth Table 1 provides a quick reference of available commands. This is followed by a written description of each command. Three additional Truth Tables appear following the Operation section; these tables provide current state/next state information.

Table 7: Truth Table–Commands and DQM Operation

(Note: 1)

NAME (FUNCTION)	CS#	RAS#	CAS#	WE#	DQM	ADDR	DQS	NOTES
COMMAND INHIBIT (NOP)	H	X	X	X	X	X	X	
NO OPERATION (NOP)	L	H	H	H	X	X	X	
ACTIVE (Select bank and activate row)	L	L	H	H	X	Bank/Row	X	3
READ (Select bank and column, and start READ burst)	L	H	L	H	L/H[8]	Bank/Col	X	4
WRITE (Select bank and column, and start WRITE burst)	L	H	L	L	L/H[8]	Bank/Col	Valid	4
BURST TERMINATE	L	H	H	L	X	X	Active	
PRECHARGE (Deactivate row in bank or banks)	L	L	H	L	X	Code	X	5
AUTO REFRESH or SELF REFRESH (Enter self refresh mode)	L	L	L	H	X	X	X	6, 7
LOAD MODE REGISTER	L	L	L	L	X	Op-Code	X	2
Write Enable/Output Enable	–	–	–	–	L	–	Active	8
Write Inhibit/Output High-Z	–	–	–	–	H	–	High-Z	8

NOTE:

1. CKE is HIGH for all commands shown except SELF REFRESH.
2. A0-A10 define the op-code written to the mode register.
3. A0-A11 provide row address, and BA0, BA1 determine which bank is made active.
4. A0-A8 (x16) or A0-A7 (x32) provide column address; A10 HIGH enables the auto precharge feature (nonpersistent), while A10 LOW disables the auto precharge feature; BA0, BA1 determine which bank is being read from or written to.
5. A10 LOW: BA0, BA1 determine the bank being precharged. A10 HIGH: All banks precharged and BA0, BA1 are "Don't Care."
6. This command is AUTO REFRESH if CKE is HIGH, SELF REFRESH if CKE is LOW.
7. Internal refresh counter controls row addressing; all inputs and I/Os are "Don't Care" except for CKE.
8. Activates or deactivates the DQs during WRITEs (zero-clock delay) and READs (two-clock delay). DQM0 controls DQ0-7, DQM1 controls DQ8-15, DQM2 controls DQ16-23, and DQM3 controls DQ24-31.

Micron Technology, Inc., reserves the right to change products or specifications without notice.
©2001 Micron Technology, Inc. All rights reserved.

Command Inhibit

The COMMAND INHIBIT function prevents new commands from being executed by the SDRAM, regardless of whether the CLK signal is enabled. The SDRAM is effectively deselected. Operations already in progress are not affected.

NO Operation (NOP)

The NO OPERATION (NOP) command is used to perform a NOP to an SDRAM which is selected (CS# is LOW). This prevents unwanted commands from being registered during idle or wait states. Operations already in progress are not affected.

LOAD mode register

The mode register is loaded via inputs A0–A11. Refer to "Mode Register" on page 11. The LOAD MODE REGISTER and LOAD EXTENDED MODE REGISTER commands can only be issued when all banks are idle, and a subsequent executable command cannot be issued until ^{t}MRD is met.

ACTIVE

The ACTIVE command is used to open (or activate) a row in a particular bank for a subsequent access. The value on the BA0, BA1 inputs selects the bank, and the address provided on inputs A0-A11 selects the row. This row remains active (or open) for accesses until a precharge command is issued to that bank. A precharge command must be issued before opening a different row in the same bank.

READ

The READ command is used to initiate a burst read access to an active row. The value on the BA0, BA1 inputs selects the bank, and the address provided on inputs A0-A8 (x16) or A0-A7 (x32) selects the starting column location. The value on input A10 determines whether or not auto precharge is used. If auto precharge is selected, the row being accessed will be precharged at the end of the read burst; if auto precharge is not selected, the row will remain open for subsequent accesses. Read data appears on the DQs subject to the logic level on the DQM inputs two clocks earlier. If a given DQM signal was registered HIGH, the corresponding DQs will be High-Z two clocks later; if the DQM signal was registered LOW, the DQs will provide valid data.

WRITE

The WRITE command is used to initiate a burst write access to an active row. The value on the BA0, BA1 inputs selects the bank, and the address provided on inputs A0-A8 (x16) or A0-A7 (x32) selects the starting column location. The value on input A10 determines whether or not auto precharge is used. If auto precharge is selected, the row being accessed will be precharged at the end of the write burst; if auto precharge is not selected, the row will remain open for subsequent accesses. Input data appearing on the DQs is written to the memory array subject to the DQM input logic level appearing coincident with the data. If a given DQM signal is registered LOW, the corresponding data will be written to memory; if the DQM signal is registered HIGH, the corresponding data inputs will be ignored, and a write will not be executed to that byte/column location.

PRECHARGE

The PRECHARGE command is used to deactivate the open row in a particular bank or the open row in all banks. The bank(s) will be available for a subsequent row access a specified time (^{t}RP) after the precharge command is issued. Input A10 determines whether one or all banks are to be precharged, and in the case where only one bank is to be precharged, inputs BA0, BA1 select the bank. Otherwise BA0, BA1 are treated as "Don't Care." Once a bank has been precharged, it is in the idle state and must be activated prior to any READ or WRITE commands being issued to that bank.

Auto Precharge

Auto precharge is a feature which performs the same individual-bank precharge function described above, without requiring an explicit command. This is accomplished by using A10 to enable auto precharge in conjunction with a specific READ or WRITE command. A precharge of the bank/row that is addressed with the READ or WRITE command is automatically performed upon completion of the READ or WRITE burst, except in the full-page burst mode, where auto precharge does not apply. Auto precharge is nonpersistent in that it is either enabled or disabled for each individual Read or Write command.

Auto precharge ensures that the precharge is initiated at the earliest valid stage within a burst. The user must not issue another command to the same bank until the precharge time (^{t}RP) is completed. This is determined as if an explicit PRECHARGE command was issued at the earliest possible time, as described for each burst type in the Operation section of this data sheet.

Micron Technology, Inc., reserves the right to change products or specifications without notice.
©2001 Micron Technology, Inc. All rights reserved.

BURST TERMINATE

The BURST TERMINATE command is used to truncate either fixed-length or full-page bursts. The most recently registered READ or WRITE command prior to the BURST TERMINATE command will be truncated, as shown in the Operation section of this data sheet.

AUTO REFRESH

AUTO REFRESH is used during normal operation of the SDRAM and is analogous to CAS#-BEFORE-RAS# (CBR) refresh in conventional DRAMs. This command is nonpersistent, so it must be issued each time a refresh is required. All active banks must be PRECHARGED prior to issuing an AUTO REFRESH command. The AUTO REFRESH command should not be issued until the minimum ^{t}RP has been met after the PRECHARGE command as shown in the operation section.

The addressing is generated by the internal refresh controller. This makes the address bits "Don't Care" during an AUTO REFRESH command. The 128Mb SDRAM requires 4,096 AUTO REFRESH cycles every 64ms (^{t}REF), regardless of width option. Providing a distributed AUTO REFRESH command every 15.625µs will meet the refresh requirement and ensure that each row is refreshed. Alternatively, 4,096 AUTO REFRESH commands can be issued in a burst at the minimum cycle rate (^{t}RFC), once every 64ms.

SELF REFRESH

The SELF REFRESH command can be used to retain data in the SDRAM, even if the rest of the system is powered down. When in the self refresh mode, the SDRAM retains data without external clocking. The SELF REFRESH command is initiated like an AUTO REFRESH command except CKE is disabled (LOW). Once the SELF REFRESH command is registered, all the inputs to the SDRAM become "Don't Care" with the exception of CKE, which must remain LOW.

Once self refresh mode is engaged, the SDRAM provides its own internal clocking, causing it to perform its own auto refresh cycles. The SDRAM must remain in self refresh mode for a minimum period equal to ^{t}RAS and may remain in self refresh mode for an indefinite period beyond that.

The procedure for exiting self refresh requires a sequence of commands. First, CLK must be stable (stable clock is defined as a signal cycling within timing constraints specified for the clock pin) prior to CKE going back HIGH. Once CKE is HIGH, the SDRAM must have NOP commands issued (a minimum of two clocks) for ^{t}XSR because time is required for the completion of any internal refresh in progress.

Upon exiting the self refresh mode, AUTO REFRESH commands must be issued every 15.625µs or less as both SELF REFRESH and AUTO REFRESH utilize the row refresh counter.

Micron Technology, Inc., reserves the right to change products or specifications without notice.
©2001 Micron Technology, Inc. All rights reserved.

Operation

BANK/ROW ACTIVATION

Before any READ or WRITE commands can be issued to a bank within the SDRAM, a row in that bank must be "opened." This is accomplished via the ACTIVE command, which selects both the bank and the row to be activated (seeFigure 8).

After opening a row (issuing an ACTIVE command), a READ or WRITE command may be issued to that row, subject to the ^{t}RCD specification. ^{t}RCD (MIN) should be divided by the clock period and rounded up to the next whole number to determine the earliest clock edge after the ACTIVE command on which a READ or WRITE command can be entered. For example, a ^{t}RCD specification of 20ns with a 125 MHz clock (8ns period) results in 2.5 clocks, rounded to 3. This is reflected in Figure 9, which covers any case where $2 < {}^{t}\text{RCD (MIN)}/{}^{t}\text{CK} \leq 3$. (The same procedure is used to convert other specification limits from time units to clock cycles.)

A subsequent ACTIVE command to a different row in the same bank can only be issued after the previous active row has been "closed" (precharged). The minimum time interval between successive ACTIVE commands to the same bank is defined by ^{t}RC.

A subsequent ACTIVE command to another bank can be issued while the first bank is being accessed, which results in a reduction of total row-access overhead. The minimum time interval between successive ACTIVE commands to different banks is defined by ^{t}RRD.

Figure 8: Activating a Specific Row in a Specific Bank

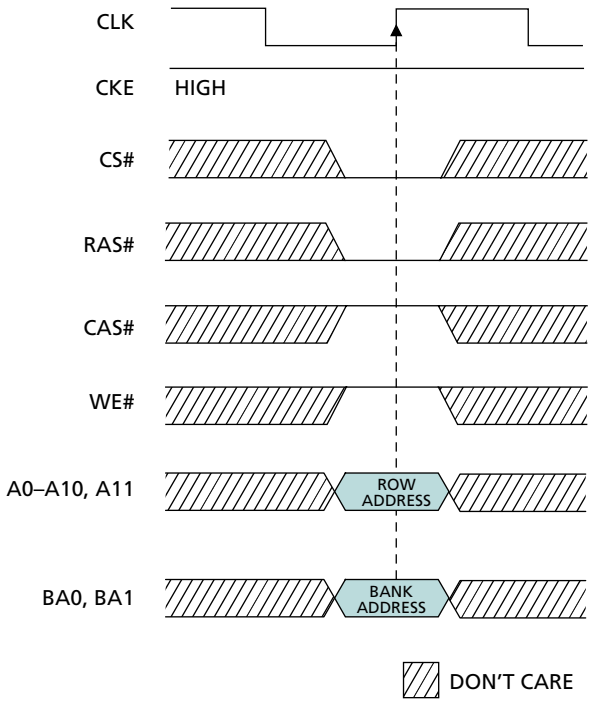

Figure 9: Example: Meeting ^{t}RCD (MIN) When $2 < {}^{t}\text{RCD (MIN)}/{}^{t}\text{CK} \leq 3$

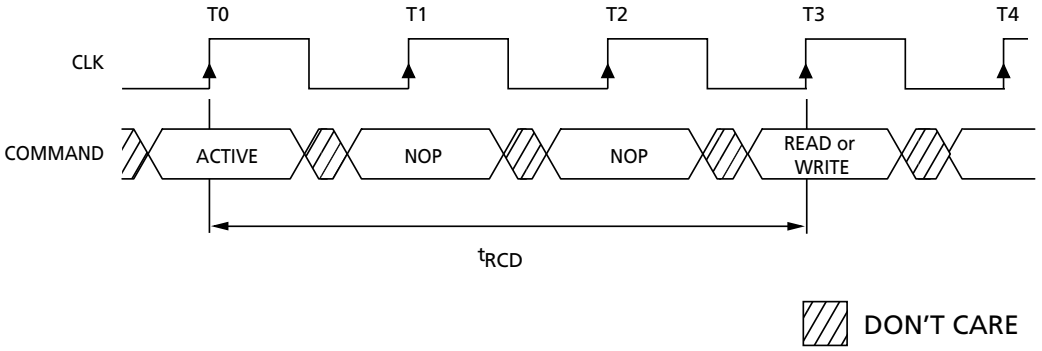

Micron Technology, Inc., reserves the right to change products or specifications without notice.
©2001 Micron Technology, Inc. All rights reserved.

READs

READ bursts are initiated with a READ command, as shown in Figure 10.

The starting column and bank addresses are provided with the READ command, and auto precharge is either enabled or disabled for that burst access. If auto precharge is enabled, the row being accessed is precharged at the completion of the burst. For the generic READ commands used in the following illustrations, auto precharge is disabled.

During READ bursts, the valid data-out element from the starting column address will be available following the CAS latency after the READ command. Each subsequent data-out element will be valid by the next positive clock edge. Figure 11 shows general timing for each possible CAS latency setting.

Figure 10: READ Command

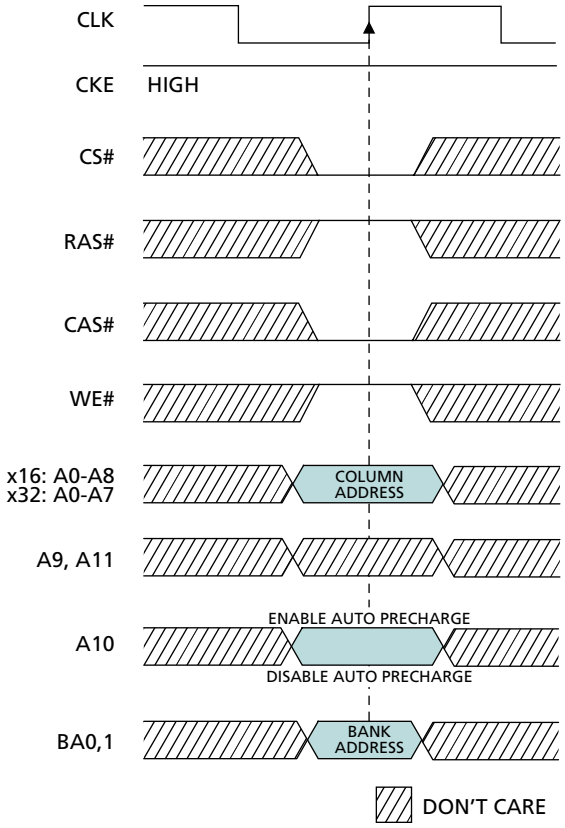

Upon completion of a burst, assuming no other commands have been initiated, the DQs will go High-Z. A full-page burst will continue until terminated. (At the end of the page, it will wrap to column 0 and continue.)

Data from any READ burst may be truncated with a subsequent READ command, and data from a fixed-length READ burst may be immediately followed by data from a READ command. In either case, a continuous flow of data can be maintained. The first data element from the new burst follows either the last element of a completed burst or the last desired data element of a longer burst that is being truncated. The new READ command should be issued *x* cycles before the clock edge at which the last desired data element is valid, where *x* equals the CAS latency minus one.

Figure 11: CAS Latency

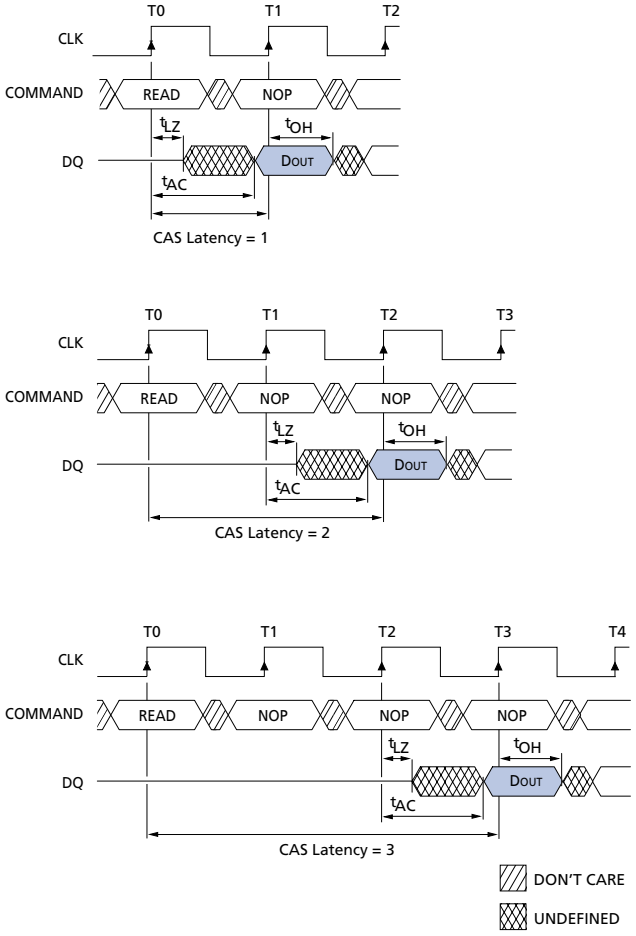

Micron Technology, Inc., reserves the right to change products or specifications without notice.
©2001 Micron Technology, Inc. All rights reserved.

This is shown in Figure 11 for CAS latencies of two and three; data element $n + 3$ is either the last of a burst of four or the last desired of a longer burst. The 128Mb SDRAM uses a pipelined architecture and therefore does not require the $2n$ rule associated with a prefetch architecture. A READ command can be initiated on any clock cycle following a previous READ command. Full-speed random read accesses can be performed to the same bank, as shown in Figure 12, or each subsequent READ may be performed to a different bank.

Figure 12: Consecutive READ Bursts

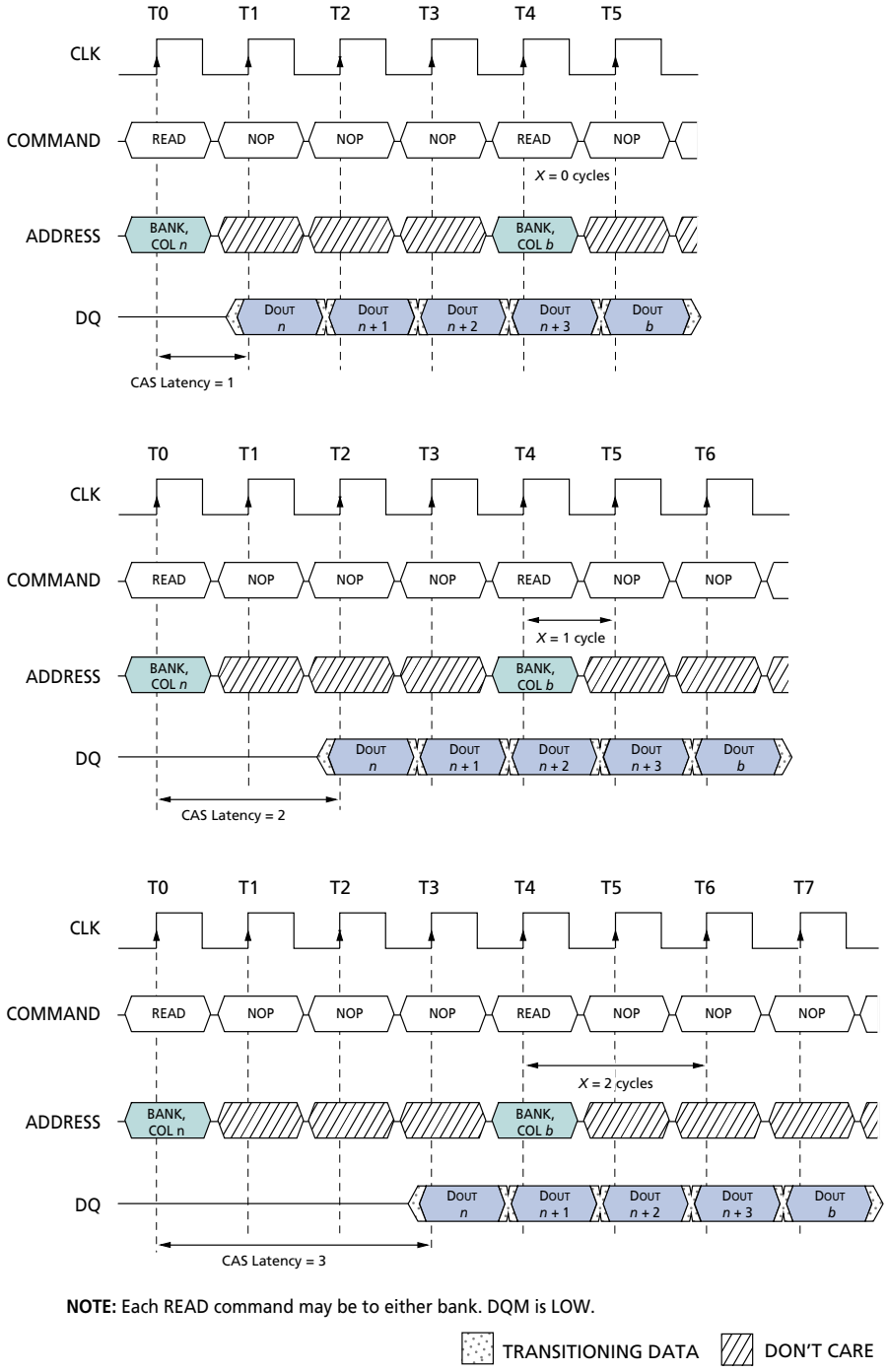

NOTE: Each READ command may be to either bank. DQM is LOW.

Micron Technology, Inc., reserves the right to change products or specifications without notice.
©2001 Micron Technology, Inc. All rights reserved.

Figure 13: Random READ Accesses

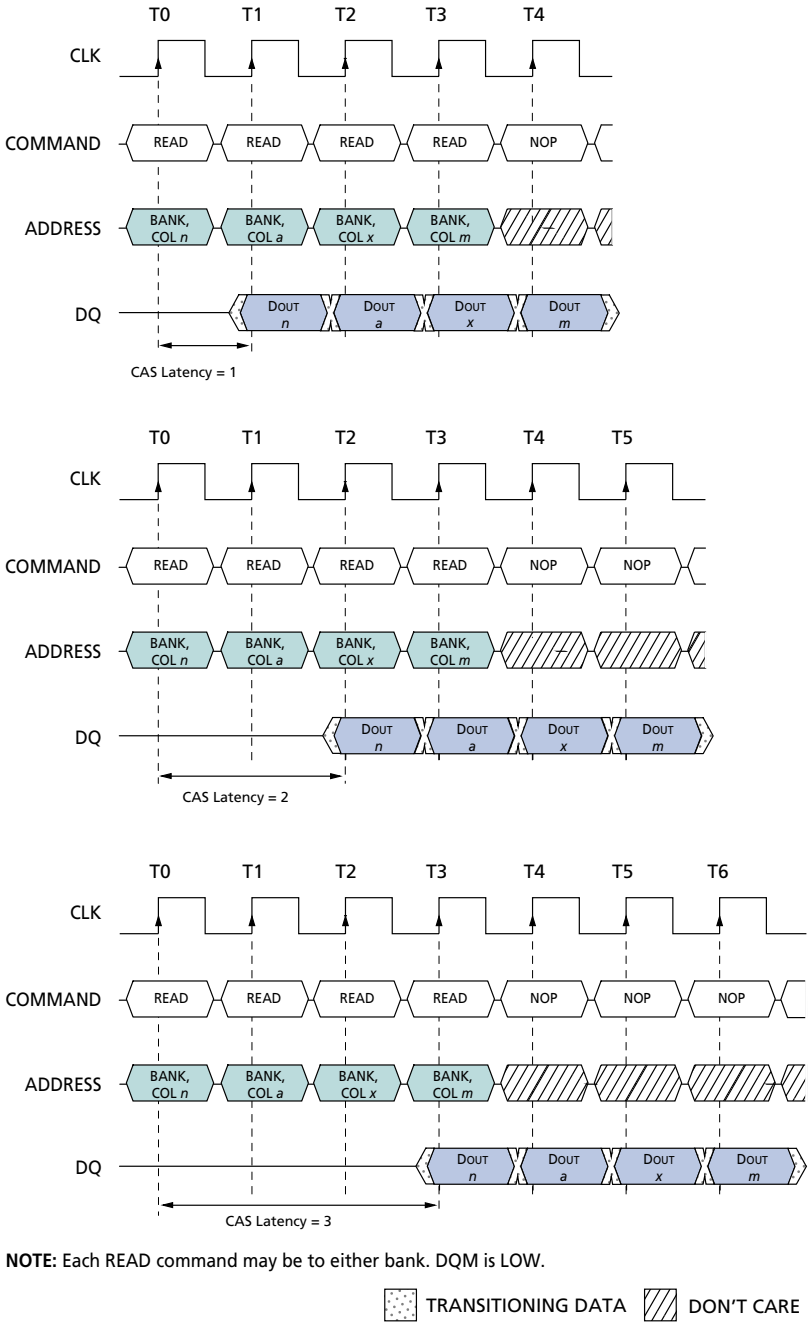

NOTE: Each READ command may be to either bank. DQM is LOW.

TRANSITIONING DATA DON'T CARE

Micron Technology, Inc., reserves the right to change products or specifications without notice.
©2001 Micron Technology, Inc. All rights reserved.

Data from any READ burst may be truncated with a subsequent WRITE command, and data from a fixed-length READ burst may be immediately followed by data from a WRITE command (subject to bus turn-around limitations). The WRITE burst may be initiated on the clock edge immediately following the last (or last desired) data element from the READ burst, provided that I/O contention can be avoided. In a given system design, there may be a possibility that the device driving the input data will go Low-Z before the SDRAM DQs go High-Z. In this case, at least a single-cycle delay should occur between the last read data and the WRITE command.

Figure 14: READ to WRITE

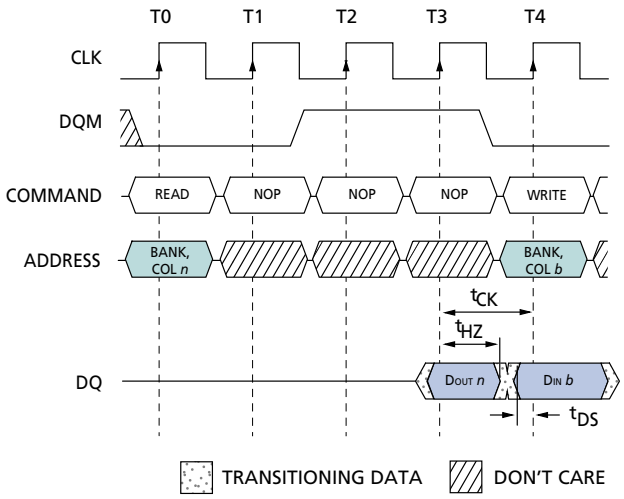

NOTE: A CAS latency of three is used for illustration. The READ command may be to any bank, and the WRITE command may be to any bank. If a burst of one is used, then DQM is not required.

The DQM input is used to avoid I/O contention, as shown in Figure 14 and Figure 15. The DQM signal must be asserted (HIGH) at least two clocks prior to the WRITE command (DQM latency is two clocks for output buffers) to suppress data-out from the READ. Once the WRITE command is registered, the DQs will go High-Z (or remain High-Z), regardless of the state of the DQM signal, provided the DQM was active on the clock just prior to the WRITE command that truncated the READ command. If not, the second WRITE will be an invalid WRITE. For example, if DQM was LOW during T4 in Figure 15, then the WRITEs at T5 and T7 would be valid, while the WRITE at T6 would be invalid.

The DQM signal must be de-asserted prior to the WRITE command (DQM latency is zero clocks for input buffers) to ensure that the written data is not masked. Figure 14 shows the case where the clock frequency allows for bus contention to be avoided without adding a NOP cycle, and Figure 15 shows the case where the additional NOP is needed.

Figure 15: READ to WRITE with Extra Clock Cycle

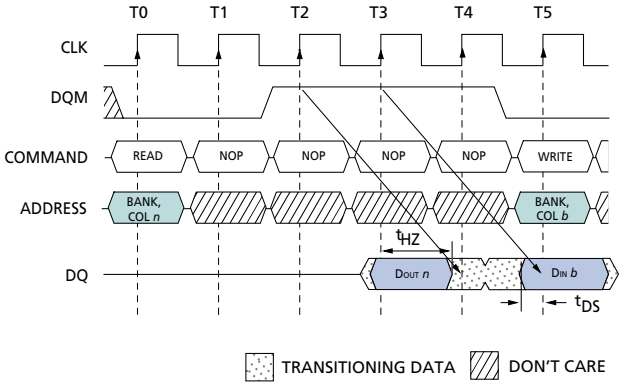

NOTE: A CAS latency of three is used for illustration. The READ command may be to any bank, and the WRITE command may be to any bank.

A fixed-length READ burst may be followed by, or truncated with, a PRECHARGE command to the same bank (provided that auto precharge was not activated), and a full-page burst may be truncated with a PRECHARGE command to the same bank. The PRECHARGE command should be issued *x* cycles before the clock edge at which the last desired data element is valid, where *x* equals the CAS latency minus one. This is shown in Figure 16 for each possible CAS latency; data element $n + 3$ is either the last of a burst of four or the last desired of a longer burst. Following the PRECHARGE command, a subsequent command to the same bank cannot be issued until ^{t}RP is met. Note that part of the row precharge time is hidden during the access of the last data element(s).

In the case of a fixed-length burst being executed to completion, a PRECHARGE command issued at the optimum time (as described above) provides the same operation that would result from the same fixed-length burst with auto precharge. The disadvantage of the PRECHARGE command is that it requires that the command and address buses be available at the appropriate time to issue the command; the advantage of the PRECHARGE command is that it can be used to truncate fixed-length or full-page bursts.

Micron Technology, Inc., reserves the right to change products or specifications without notice.
©2001 Micron Technology, Inc. All rights reserved.

Figure 16: READ to PRECHARGE

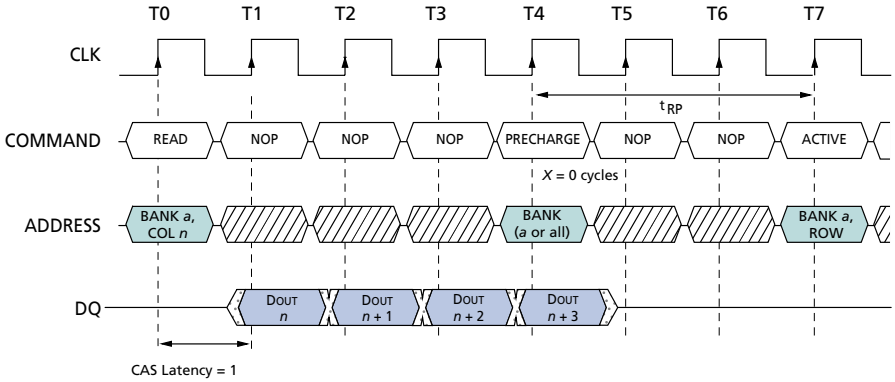

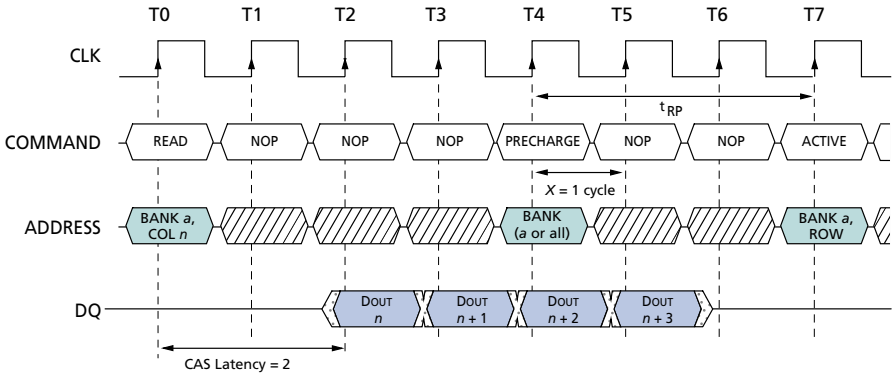

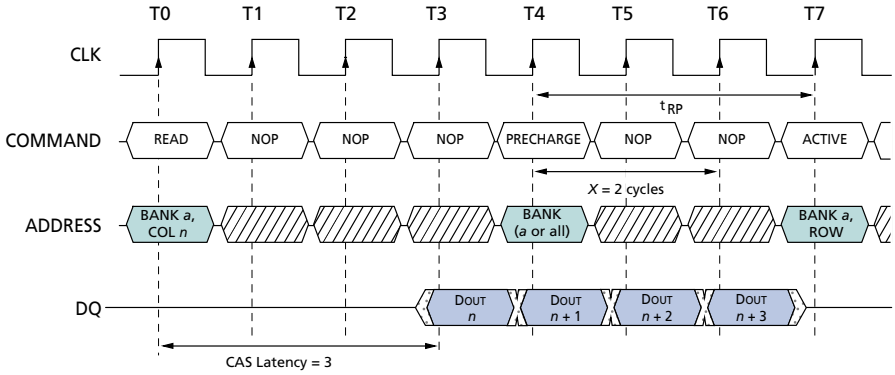

NOTE: DQM is LOW.

TRANSITIONING DATA DON'T CARE

Micron Technology, Inc., reserves the right to change products or specifications without notice.
©2001 Micron Technology, Inc. All rights reserved.

Full-page READ bursts can be truncated with the BURST TERMINATE command, and fixed-length READ bursts may be truncated with a BURST TERMINATE command, provided that auto precharge was not activated. The BURST TERMINATE command should be issued *x* cycles before the clock edge at which the last desired data element is valid, where *x* equals the CAS latency minus one. This is shown in Figure 17 for each possible CAS latency; data element *n* + 3 is the last desired data element of a longer burst.

Figure 17: Terminating a READ Burst

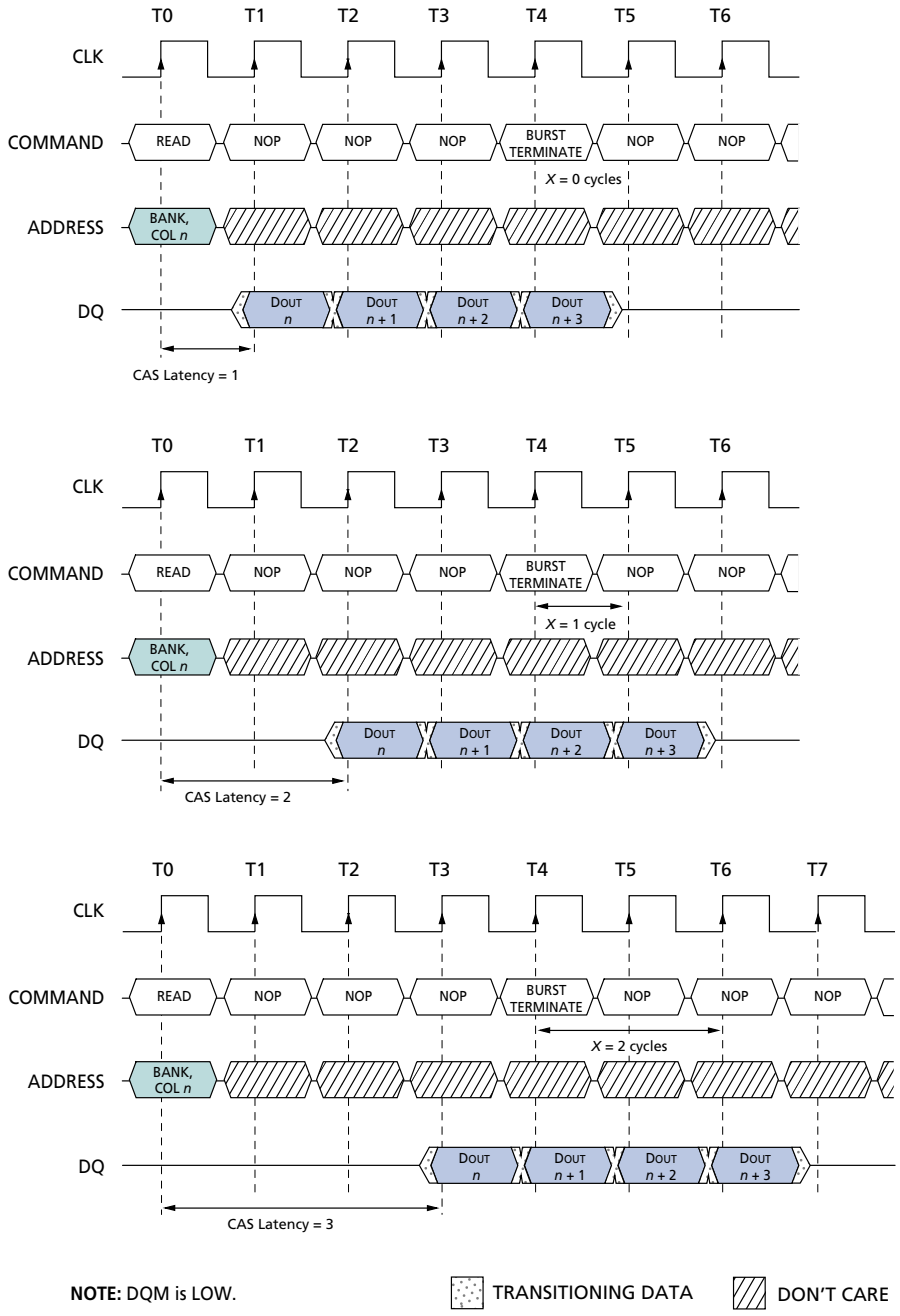

Micron Technology, Inc., reserves the right to change products or specifications without notice.
©2001 Micron Technology, Inc. All rights reserved.

WRITEs

WRITE bursts are initiated with a WRITE command, as shown in Figure 18.

The starting column and bank addresses are provided with the WRITE command, and auto precharge is either enabled or disabled for that access. If auto precharge is enabled, the row being accessed is precharged at the completion of the burst. For the generic WRITE commands used in the following illustrations, auto precharge is disabled.

During WRITE bursts, the first valid data-in element will be registered coincident with the WRITE command. Subsequent data elements will be registered on each successive positive clock edge. Upon completion of a fixed-length burst, assuming no other commands have been initiated, the DQs will remain High-Z and any additional input data will be ignored (see Figure 19). A full-page burst will continue until terminated. (At the end of the page, it will wrap to column 0 and continue.)

Figure 18: WRITE Command

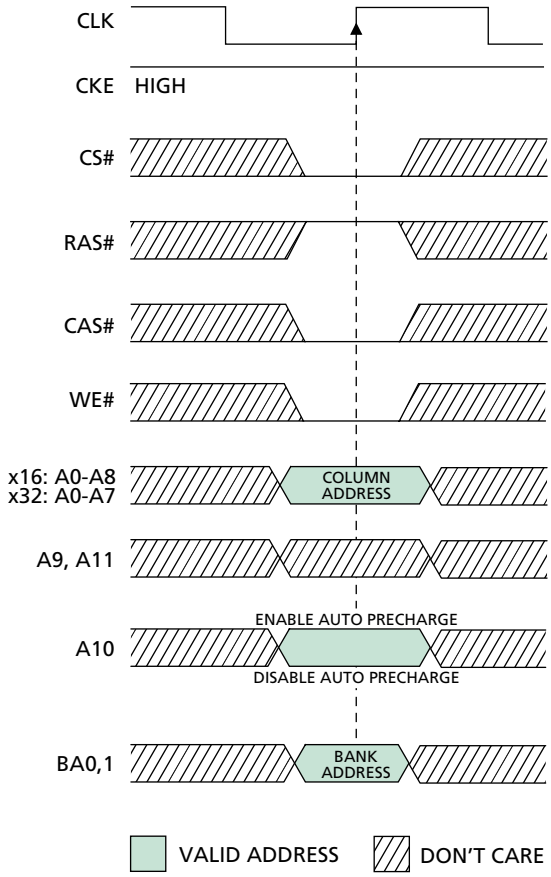

Data for any WRITE burst may be truncated with a subsequent WRITE command, and data for a fixed-length WRITE burst may be immediately followed by data for a WRITE command. The new WRITE command can be issued on any clock following the previous WRITE command, and the data provided coincident with the new command applies to the new command. An example is shown in Figure 19. Data n + 1 is either the last of a burst of two or the last desired of a longer burst. The 128Mb SDRAM uses a pipelined architecture and therefore does not require the 2n rule associated with a prefetch architecture. A WRITE command can be initiated on any clock cycle following a previous WRITE command. Full-speed random write accesses within a page can be performed to the same bank, as shown in Figure 20, or each subsequent WRITE may be performed to a different bank.

Figure 19: WRITE Burst

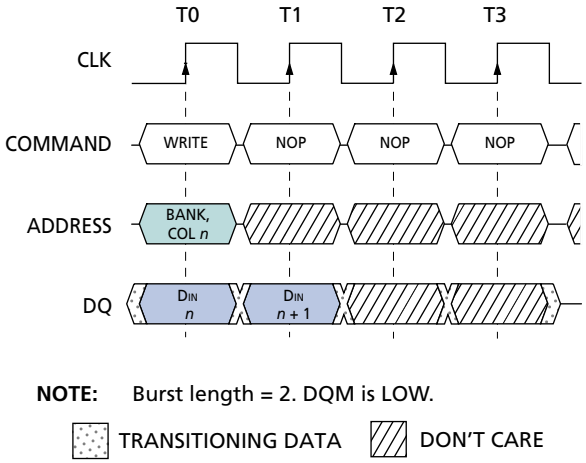

Figure 20: WRITE to WRITE

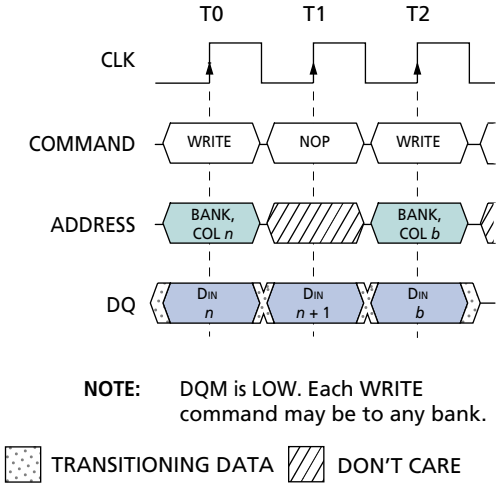

Micron Technology, Inc., reserves the right to change products or specifications without notice.
©2001 Micron Technology, Inc. All rights reserved.

Data for any WRITE burst may be truncated with a subsequent READ command, and data for a fixed-length WRITE burst may be immediately followed by a READ command. Once the READ command is registered, the data inputs will be ignored, and writes will not be executed. An example is shown in Figure 22. Data $n + 1$ is either the last of a burst of two or the last desired of a longer burst.

Data for a fixed-length WRITE burst may be followed by, or truncated with, a PRECHARGE command to the same bank (provided that auto precharge was not activated), and a full-page WRITE burst may be truncated with a PRECHARGE command to the same bank. The PRECHARGE command should be issued ^{t}WR after the clock edge at which the last desired input data element is registered. The auto precharge mode requires a ^{t}WR of at least one clock plus time, regardless of frequency.

In addition, when truncating a WRITE burst, the DQM signal must be used to mask input data for the clock edge prior to, and the clock edge coincident with, the PRECHARGE command. An example is shown in Figure 23. Data $n + 1$ is either the last of a burst of two or the last desired of a longer burst. Following the PRECHARGE command, a subsequent command to the same bank cannot be issued until ^{t}RP is met.

In the case of a fixed-length burst being executed to completion, a PRECHARGE command issued at the optimum time (as described above) provides the same operation that would result from the same fixed-length burst with auto precharge. The disadvantage of the PRECHARGE command is that it requires that the command and address buses be available at the appropriate time to issue the command; the advantage of the PRECHARGE command is that it can be used to truncate fixed-length or full-page bursts.

Figure 21: Random WRITE Cycles

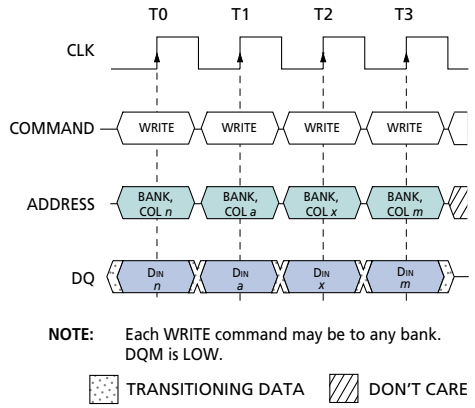

Figure 22: WRITE to READ

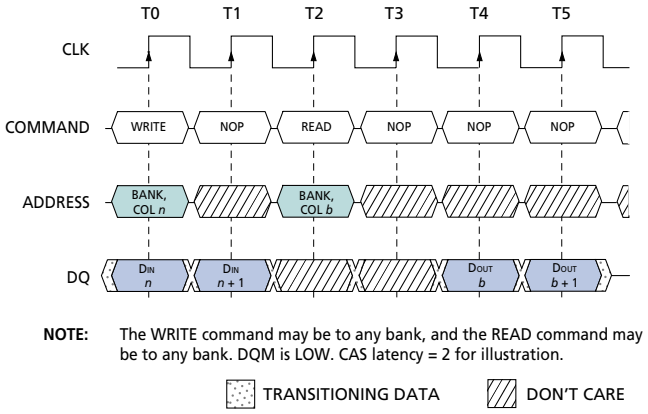

Figure 23: WRITE to PRECHARGE

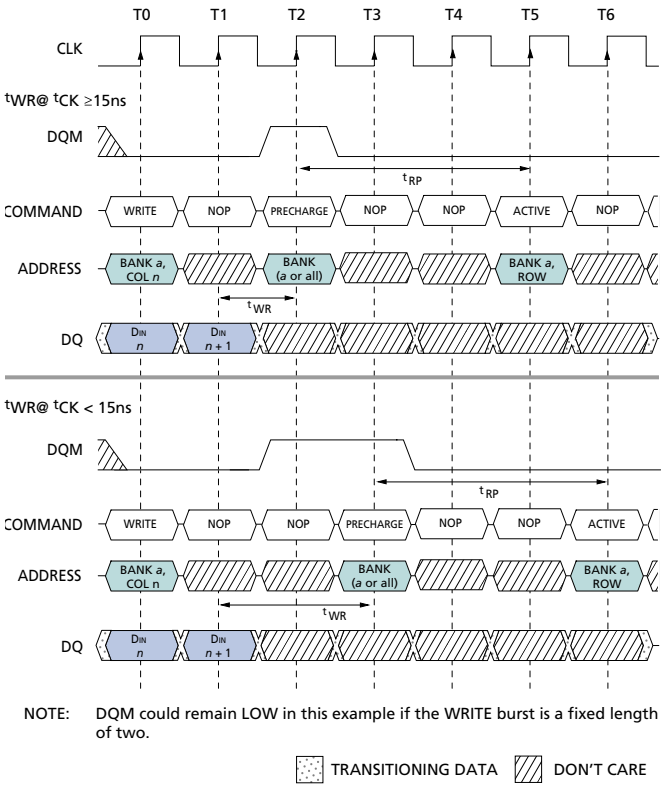

Micron Technology, Inc., reserves the right to change products or specifications without notice.
©2001 Micron Technology, Inc. All rights reserved.

Fixed-length or full-page WRITE bursts can be truncated with the BURST TERMINATE command. When truncating a WRITE burst, the input data applied coincident with the BURST TERMINATE command will be ignored. The last data written (provided that DQM is LOW at that time) will be the input data applied one clock previous to the BURST TERMINATE command. This is shown in Figure 24, where data n is the last desired data element of a longer burst.

Figure 24: Terminating a WRITE Burst

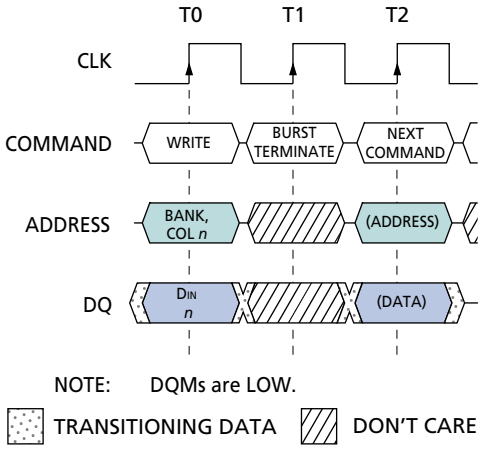

Figure 25: PRECHARGE Command

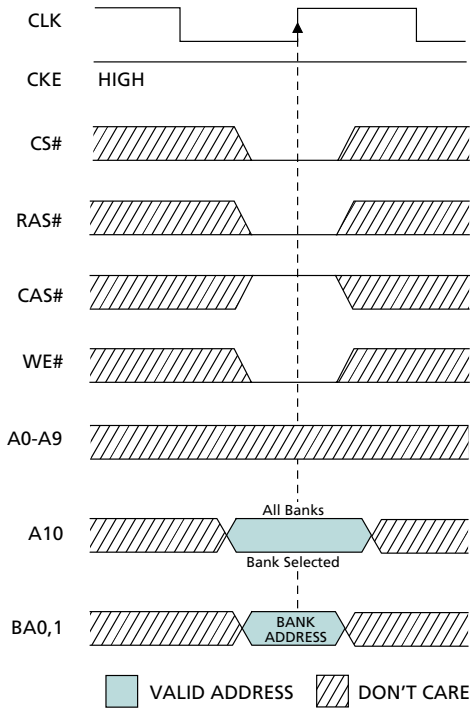

PRECHARGE

The PRECHARGE command (see Figure 25) is used to deactivate the open row in a particular bank or the open row in all banks. The bank(s) will be available for a subsequent row access some specified time (^{t}RP) after the precharge command is issued. Input A10 determines whether one or all banks are to be precharged, and in the case where only one bank is to be precharged, inputs BA0, BA1 select the bank. When all banks are to be precharged, inputs BA0, BA1 are treated as "Don't Care." Once a bank has been precharged, it is in the idle state and must be activated prior to any READ or WRITE commands being issued to that bank.

POWER-DOWN

Power-down occurs if CKE is registered low coincident with a NOP or COMMAND INHIBIT when no accesses are in progress. If power-down occurs when all banks are idle, this mode is referred to as precharge power-down; if power-down occurs when there is a row active in any bank, this mode is referred to as active power-down. Entering power-down deactivates the input and output buffers, excluding CKE, for maximum power savings while in standby. The device may not remain in the power-down state longer than the refresh period (64ms) since no refresh operations are performed in this mode.

The power-down state is exited by registering a NOP or COMMAND INHIBIT and CKE HIGH at the desired clock edge (meeting ^{t}CKS). See Figure 26.

Figure 26: Power-Down

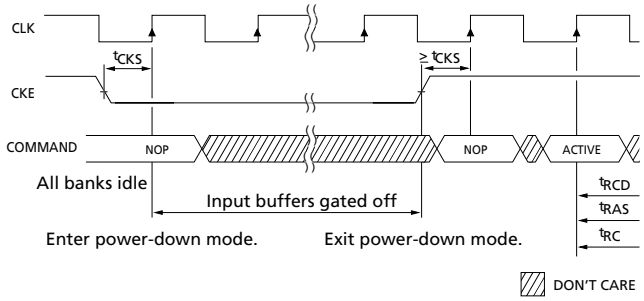

Micron Technology, Inc., reserves the right to change products or specifications without notice.
©2001 Micron Technology, Inc. All rights reserved.

CLOCK SUSPEND

The clock suspend mode occurs when a column access/burst is in progress and CKE is registered low. In the clock suspend mode, the internal clock is deactivated, "freezing" the synchronous logic.

For each positive clock edge on which CKE is sampled LOW, the next internal positive clock edge is suspended. Any command or data present on the input pins at the time of a suspended internal clock edge is ignored; any data present on the DQ pins remains driven; and burst counters are not incremented, as long as the clock is suspended. (See examples in Figure 27 and Figure 28.)

Figure 27: Clock Suspend During WRITE Burst

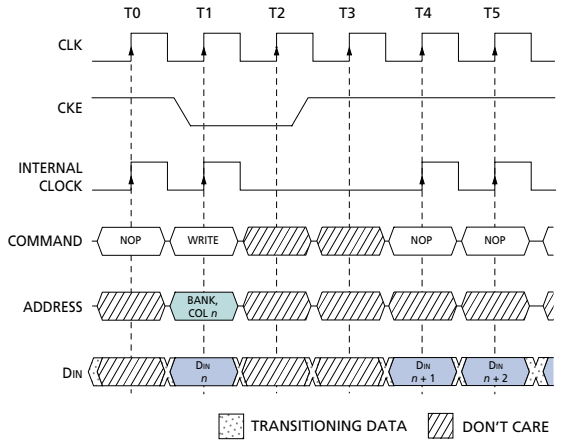

NOTE: For this example, burst length = 4 or greater, and DM is LOW.

Clock suspend mode is exited by registering CKE HIGH; the internal clock and related operation will resume on the subsequent positive clock edge.

BURST READ/SINGLE WRITE

The burst read/single write mode is entered by programming the write burst mode bit (M9) in the mode register to a logic 1. In this mode, all WRITE commands result in the access of a single column location (burst of one), regardless of the programmed burst length. READ commands access columns according to the programmed burst length and sequence, just as in the normal mode of operation (M9 = 0).

Figure 28: Clock Suspend During READ Burst

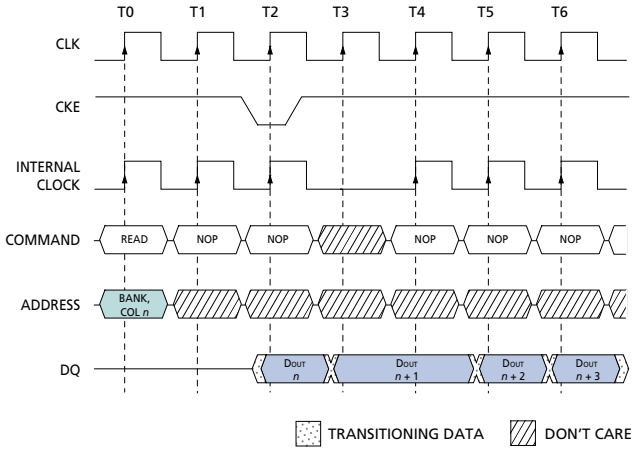

NOTE: For this example, CAS latency = 2, burst length = 4 or greater, and DQM is LOW.

Micron Technology, Inc., reserves the right to change products or specifications without notice.
©2001 Micron Technology, Inc. All rights reserved.

CONCURRENT Auto Precharge

An access command (READ or WRITE) to another bank while an access command with auto precharge enabled is executing is not allowed by SDRAMs, unless the SDRAM supports Concurrent Auto precharge. Micron SDRAMs support Concurrent Auto precharge. Four cases where Concurrent Auto precharge occurs are defined below.

READ with Auto Precharge

1. Interrupted by a READ (with or without auto precharge): A READ to bank m will interrupt a READ on bank *n*, CAS latency later. The precharge to bank *n* will begin when the READ to bank *m* is registered (Figure 29).
2. Interrupted by a WRITE (with or without auto precharge): A WRITE to bank *m* will interrupt a READ on bank *n* when registered. DQM should be used two clocks prior to the WRITE command to prevent bus contention. The precharge to bank *n* will begin when the WRITE to bank *m* is registered (Figure 30).

Figure 29: READ With Auto Precharge Interrupted by a READ

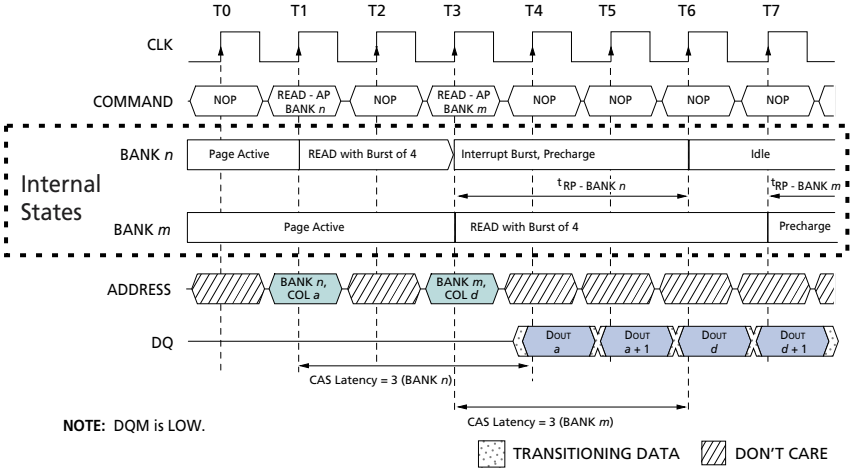

Figure 30: READ With Auto Precharge Interrupted by a WRITE

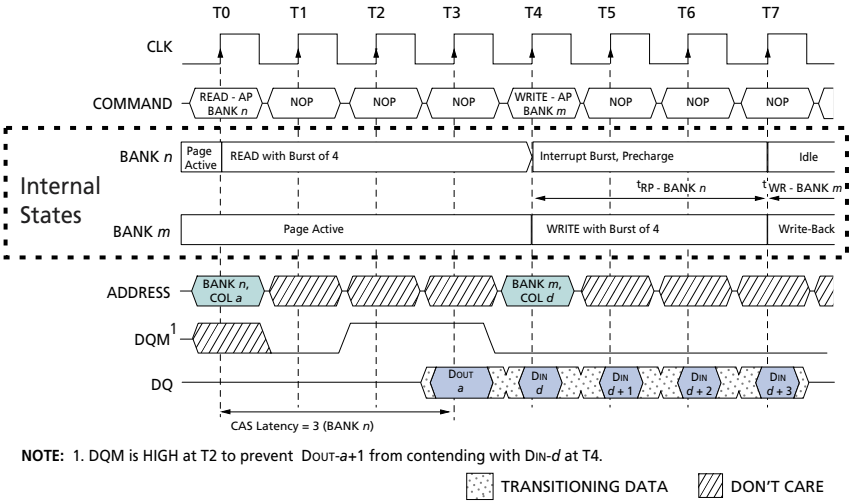

Micron Technology, Inc., reserves the right to change products or specifications without notice.
©2001 Micron Technology, Inc. All rights reserved.

WRITE with Auto Precharge

3. Interrupted by a READ (with or without auto precharge): A READ to bank m will interrupt a WRITE on bank *n* when registered, with the data-out appearing CAS latency later. The precharge to bank *n* will begin after ^{t}WR is met, where ^{t}WR begins when the READ to bank *m* is registered. The last valid WRITE to bank *n* will be data-in registered one clock prior to the READ to bank *m* (Figure 31).
4. Interrupted by a WRITE (with or without auto precharge): A WRITE to bank *m* will interrupt a WRITE on bank *n* when registered. The precharge to bank *n* will begin after ^{t}WR is met, where ^{t}WR begins when the WRITE to bank *m* is registered. The last valid data WRITE to bank *n* will be data registered one clock prior to a WRITE to bank *m* (Figure 32).

Figure 31: WRITE With Auto Precharge Interrupted by a READ

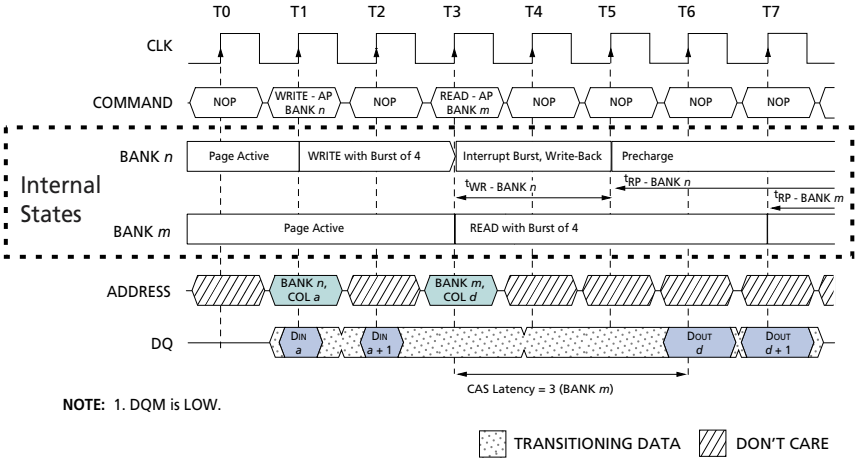

NOTE: 1. DQM is LOW.

Figure 32: WRITE With Auto Precharge Interrupted by a WRITE

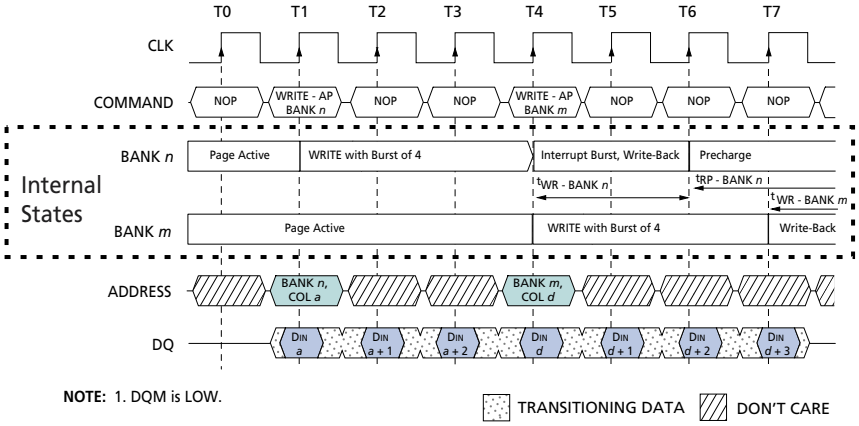

NOTE: 1. DQM is LOW.

Micron Technology, Inc., reserves the right to change products or specifications without notice.
©2001 Micron Technology, Inc. All rights reserved.

Table 8: Truth Table – CKE

(Notes: 1-4)

CKE_{n-1}	CKE_n	CURRENT STATE	$COMMAND_n$	$ACTION_n$	NOTES
L	L	Power-Down	X	Maintain Power-Down	
		Self Refresh	X	Maintain Self Refresh	
		Clock Suspend	X	Maintain Clock Suspend	
L	H	Power-Down	COMMAND INHIBIT or NOP	Exit Power-Down	5
		Self Refresh	COMMAND INHIBIT or NOP	Exit Self Refresh	6
		Clock Suspend	X	Exit Clock Suspend	7
H	L	All Banks Idle	COMMAND INHIBIT or NOP	Power-Down Entry	
		All Banks Idle	AUTO REFRESH	Self Refresh Entry	
		Reading or Writing	VALID	Clock Suspend Entry	
H	H		See Truth Table 3		

NOTE:

1. CKE_n is the logic state of CKE at clock edge n; CKE_{n-1} was the state of CKE at the previous clock edge.
2. Current state is the state of the SDRAM immediately prior to clock edge *n*.
3. $COMMAND_n$ is the command registered at clock edge *n*, and $ACTION_n$ is a result of $COMMAND_n$.
4. All states and sequences not shown are illegal or reserved.
5. Exiting power-down at clock edge *n* will put the device in the all banks idle state in time for clock edge *n* + 1 (provided that ^tCKS is met).
6. Exiting self refresh at clock edge *n* will put the device in the all banks idle state once ^tXSR is met. COMMAND INHIBIT or NOP commands should be issued on any clock edges occurring during the ^tXSR period. A minimum of two NOP commands must be provided during ^tXSR period.
7. After exiting clock suspend at clock edge *n*, the device will resume operation and recognize the next command at clock edge *n* + 1.

Micron Technology, Inc., reserves the right to change products or specifications without notice.
©2001 Micron Technology, Inc. All rights reserved.

Table 9: Truth Table – Current State Bank *n*, Command To Bank *n*

Notes: 1-6; notes appear below table

CURRENT STATE	CS#	RAS#	CAS#	WE#	COMMAND (ACTION)	NOTES
Any	H	X	X	X	COMMAND INHIBIT (NOP/Continue previous operation)	
	L	H	H	H	NO OPERATION (NOP/Continue previous operation)	
Idle	L	L	H	H	ACTIVE (Select and activate row)	
	L	L	L	H	AUTO REFRESH	7
	L	L	L	L	LOAD MODE REGISTER	7
	L	L	H	L	PRECHARGE	11
Row Active	L	H	L	H	READ (Select column and start READ burst)	10
	L	H	L	L	WRITE (Select column and start WRITE burst)	10
	L	L	H	L	PRECHARGE (Deactivate row in bank or banks)	8
Read (Auto Precharge Disabled)	L	H	L	H	READ (Select column and start new READ burst)	10
	L	H	L	L	WRITE (Select column and start WRITE burst)	10
	L	L	H	L	PRECHARGE (Truncate READ burst, start PRECHARGE)	8
	L	H	H	L	BURST TERMINATE	9
Write (Auto Precharge Disabled)	L	H	L	H	READ (Select column and start READ burst)	10
	L	H	L	L	WRITE (Select column and start new WRITE burst)	10
	L	L	H	L	PRECHARGE (Truncate WRITE burst, start PRECHARGE)	8
	L	H	H	L	BURST TERMINATE	9

NOTE:

1. This table applies when CKE_{n-1} was HIGH and CKE_n is HIGH (see Truth Table 2) and after ^tXSR has been met (if the previous state was self refresh).
2. This table is bank-specific, except where noted; i.e., the current state is for a specific bank and the commands shown are those allowed to be issued to that bank when in that state. Exceptions are covered in the notes below.
3. Current state definitions:
   Idle:The bank has been precharged, and ^tRP has been met.
   Row Active: A row in the bank has been activated, and ^tRCD has been met. No data bursts/accesses and no register accesses are in progress.
   Read: A READ burst has been initiated, with auto precharge disabled, and has not yet terminated or been terminated.
   Write: A WRITE burst has been initiated, with auto precharge disabled, and has not yet terminated or been terminated.
4. The following states must not be interrupted by a command issued to the same bank. COMMAND INHIBIT or NOP commands, or allowable commands to the other bank should be issued on any clock edge occurring during these states. Allowable commands to the other bank are determined by its current state and Truth Table 3, and according to Truth Table 4.
   Precharging: Starts with registration of a PRECHARGE command and ends when ^tRP is met. Once ^tRP is met, the bank will be in the idle state.
   Row Activating: Starts with registration of an ACTIVE command and ends when ^tRCD is met. Once ^tRCD is met, the bank will be in the row active state.
   Read w/Auto Precharge Enabled: Starts with registration of a READ command with auto precharge enabled and ends when ^tRP has been met. Once ^tRP is met, the bank will be in the idle state.
   Write w/Auto Precharge Enabled: Starts with registration of a WRITE command with auto precharge enabled and ends when ^tRP has been met. Once ^tRP is met, the bank will be in the idle state.
5. The following states must not be interrupted by any executable command; COMMAND INHIBIT or NOP commands must be applied on each positive clock edge during these states.
   Refreshing: Starts with registration of an AUTO REFRESH command and ends when ^tRC is met. Once ^tRC is met, the SDRAM will be in the all banks idle state.
   Accessing Mode Register: Starts with registration of a LOAD MODE REGISTER command and ends when ^tMRD has been met. Once ^tMRD is met, the SDRAM will be in the all banks idle state.
   Precharging All: Starts with registration of a PRECHARGE ALL command and ends when ^tRP is met. Once ^tRP is met, all banks will be in the idle state.
6. All states and sequences not shown are illegal or reserved.
7. Not bank-specific; requires that all banks are idle.
8. May or may not be bank-specific; if all banks are to be precharged, all must be in a valid state for precharging.

Micron Technology, Inc., reserves the right to change products or specifications without notice.
©2001 Micron Technology, Inc. All rights reserved.

9. Not bank-specific; BURST TERMINATE affects the most recent READ or WRITE burst, regardless of bank.
10. READs or WRITEs listed in the Command (Action) column include READs or WRITEs with auto precharge enabled and READs or WRITEs with auto precharge disabled.
11. Does not affect the state of the bank and acts as a NOP to that bank.

Micron Technology, Inc., reserves the right to change products or specifications without notice.
©2001 Micron Technology, Inc. All rights reserved.

Table 10: Truth Table – CURRENT STATE BANK n, COMMAND TO BANK m

Notes: 1-6; notes appear below and on next page

CURRENT STATE	CS#	RAS#	CAS#	WE#	COMMAND (ACTION)	NOTES
Any	H	X	X	X	COMMAND INHIBIT (NOP/Continue previous operation)	
	L	H	H	H	NO OPERATION (NOP/Continue previous operation)	
Idle	X	X	X	X	Any Command Otherwise Allowed to Bank m	
Row Activating, Active, or Precharging	L	L	H	H	ACTIVE (Select and activate row)	
	L	H	L	H	READ (Select column and start READ burst)	7
	L	H	L	L	WRITE (Select column and start WRITE burst)	7
	L	L	H	L	PRECHARGE	
Read (Auto Precharge Disabled)	L	L	H	H	ACTIVE (Select and activate row)	
	L	H	L	H	READ (Select column and start new READ burst)	7, 10
	L	H	L	L	WRITE (Select column and start WRITE burst)	7, 11
	L	L	H	L	PRECHARGE	9
Write (Auto Precharge Disabled)	L	L	H	H	ACTIVE (Select and activate row)	
	L	H	L	H	READ (Select column and start READ burst)	7, 12
	L	H	L	L	WRITE (Select column and start new WRITE burst)	7, 13
	L	L	H	L	PRECHARGE	9
Read (With Auto Precharge)	L	L	H	H	ACTIVE (Select and activate row)	
	L	H	L	H	READ (Select column and start new READ burst)	7, 8, 14
	L	H	L	L	WRITE (Select column and start WRITE burst)	7, 8, 15
	L	L	H	L	PRECHARGE	9
Write (With Auto Precharge)	L	L	H	H	ACTIVE (Select and activate row)	
	L	H	L	H	READ (Select column and start READ burst)	7, 8, 16
	L	H	L	L	WRITE (Select column and start new WRITE burst)	7, 8, 17
	L	L	H	L	PRECHARGE	9

NOTE:

1. This table applies when CKE_{n-1} was HIGH and CKE_n is HIGH (see Truth Table 2) and after ^tXSR has been met (if the previous state was self refresh).
2. This table describes alternate bank operation, except where noted; i.e., the current state is for bank n and the commands shown are those allowed to be issued to bank m (assuming that bank m is in such a state that the given command is allowable). Exceptions are covered in the notes below.
3. Current state definitions:
   Idle: The bank has been precharged, and ^tRP has been met.
   Row Active: A row in the bank has been activated, and ^tRCD has been met. No data bursts/accesses and no register accesses are in progress.
   Read: A READ burst has been initiated, with auto precharge disabled, and has not yet terminated or been terminated.
   Write: A WRITE burst has been initiated, with auto precharge disabled, and has not yet terminated or been terminated.
   Read w/Auto Precharge Enabled: Starts with registration of a READ command with auto precharge enabled, and ends when ^tRP has been met. Once ^tRP is met, the bank will be in the idle state.
   Write w/Auto Precharge Enabled: Starts with registration of a WRITE command with auto precharge enabled, and ends when ^tRP has been met. Once ^tRP is met, the bank will be in the idle state.
4. AUTO REFRESH, SELF REFRESH and LOAD MODE REGISTER commands may only be issued when all banks are idle.
5. A BURST TERMINATE command cannot be issued to another bank; it applies to the bank represented by the current state only.
6. All states and sequences not shown are illegal or reserved.
7. READs or WRITEs to bank m listed in the Command (Action) column include READs or WRITEs with auto precharge enabled and READs or WRITEs with auto precharge disabled.

Micron Technology, Inc., reserves the right to change products or specifications without notice.
©2001 Micron Technology, Inc. All rights reserved.

8. CONCURRENT AUTO PRECHARGE: Bank n will initiate the auto precharge command when its burst has been interrupted by bank m's burst.
9. Burst in bank n continues as initiated.
10. For a READ without auto precharge interrupted by a READ (with or without auto precharge), the READ to bank m will interrupt the READ on bank n, CAS latency later (Figure 12).
11. For a READ without auto precharge interrupted by a WRITE (with or without auto precharge), the WRITE to bank m will interrupt the READ on bank n when registered (Figure 14 and Figure 15). DQM should be used one clock prior to the WRITE command to prevent bus contention.
12. For a WRITE without auto precharge interrupted by a READ (with or without auto precharge), the READ to bank m will interrupt the WRITE on bank n when registered (Figure 22), with the data-out appearing CAS latency later. The last valid WRITE to bank n will be data-in registered one clock prior to the READ to bank m.
13. For a WRITE without auto precharge interrupted by a WRITE (with or without auto precharge), the WRITE to bank will interrupt the WRITE on bank n when registered (Figure 20). The last valid WRITE to bank n will be data-in registered one clock prior to the READ to bank m.
14. For a READ with auto precharge interrupted by a READ (with or without auto precharge), the READ to bank m will interrupt the READ on bank n, CAS latency later. The PRECHARGE to bank n will begin when the READ to bank m is registered (Figure 29).
15. For a READ with auto precharge interrupted by a WRITE (with or without auto precharge), the WRITE to bank m will interrupt the READ on bank n when registered. DQM should be used two clocks prior to the WRITE command to prevent bus contention. The PRECHARGE to bank n will begin when the WRITE to bank m is registered (Figure 30).
16. For a WRITE with auto precharge interrupted by a READ (with or without auto precharge), the READ to bank m will interrupt the WRITE on bank n when registered, with the data-out appearing CAS latency later. The PRECHARGE to bank n will begin after ^{t}WR is met, where ^{t}WR begins when the READ to bank m is registered. The last valid WRITE bank n will be data-in registered one clock prior to the READ to bank m (Figure 31).
17. For a WRITE with auto precharge interrupted by a WRITE (with or without auto precharge), the WRITE to bank m interrupt the WRITE on bank n when registered. The PRECHARGE to bank n will begin after ^{t}WR is met, where ^{t}WR begins when the WRITE to bank m is registered. The last valid WRITE to bank n will be data registered one clock to the WRITE to bank m (Figure 32).

Micron Technology, Inc., reserves the right to change products or specifications without notice.
©2001 Micron Technology, Inc. All rights reserved.

Absolute Maximum Ratings

Voltage on VDD/VDDQ Supply
Relative to VSS(LC, G devices) . . . . . -1V to +4.6V
Relative to VSS(V devices) . . . . . 0.5V to +3.6V
Voltage on Inputs, NC or I/O Pins
Relative to VSS(LC, G devices) . . . . . -1V to +4.6V
Relative to VSS(V devices) . . . . . -0.5V to +3.6V
Operating Temperature
T_A (Commercial) . . . . . 0°C to +70°C
T_A (Industrial) . . . . . -40°C to +85°C
T_A (Extended) . . . . . -25°C to +75°C
Storage Temperature (plastic) . . . . -55°C to +150°C

Stresses greater than those listed under "Absolute Maximum Ratings" may cause permanent damage to the device. This is a stress rating only, and functional operation of the device at these or any other conditions above those indicated in the operational sections of this specification is not implied. Exposure to absolute maximum rating conditions for extended periods may affect reliability.

Table 11: DC Electrical Characteristics and Operating Conditions (LC Version)

Notes: 1, 6; notes appear on page 42; VDD= +3.3V ±0.3V, VDDQ = +3.3V ±0.3V

PARAMETER/CONDITION	SYMBOL	MIN	MAX	UNITS	NOTES
Supply Voltage	VDD	3	3.6	V	
I/O Supply Voltage	VDDQ	3	3.6	V	
Input High Voltage: Logic 1; All inputs	VIH	2	VDD + 0.3	V	22
Input Low Voltage: Logic 0; All inputs	VIL	-0.3	0.8	V	22
Data Output High Voltage: Logic 1; All inputs	VOH	2.4	–	V	
Data Output LOW Voltage: Logic 0; All inputs	VOL	–	0.4	V	
Input Leakage Current: Any Input 0V ≤ VIN ≤ VDD (All other pins not under test = 0V)	II	-5	5	µA	
Output Leakage Current: DQs are disabled; 0V ≤ VOUT ≤ VDDQ	IOZ	-5	5	µA	

Table 12: DC Electrical Characteristics and Operating Conditions (G Version)

Notes: 1, 6; notes appear on page 42; VDD = +3.0V ±0.3V, VDDQ = +3.0V ±0.3V

PARAMETER/CONDITION	SYMBOL	MIN	MAX	UNITS	NOTES
Supply Voltage	VDD	2.7	3.3	V	
I/O Supply Voltage	VDDQ	2.7	3.3	V	
Input High Voltage: Logic 1; All inputs	VIH	2	VDD + 0.3	V	22
Input Low Voltage: Logic 0; All inputs	VIL	-0.3	0.8	V	22
Data Output High Voltage: Logic 1; All inputs	VOH	2.4	–	V	
Data Output LOW Voltage: Logic 0; All inputs	VOL	–	0.4	V	
Input Leakage Current: Any Input 0V ≤ VIN ≤ VDD (All other pins not under test = 0V)	II	-5	5	µA	
Output Leakage Current: DQs are disabled; 0V ≤ VOUT ≤ VDDQ	IOZ	-5	5	µA	

Micron Technology, Inc., reserves the right to change products or specifications without notice.
©2001 Micron Technology, Inc. All rights reserved.

Table 13: DC Electrical Characteristics and Operating Conditions (V Version)

Notes: 1, 6; notes appear on page 42; V_{DD} = 2.5 ±0.2V, V_{DDQ} = +2.5V ±0.2V or +1.8V ±0.15V

PARAMETER/CONDITION	SYMBOL	MIN	MAX	UNITS	NOTES
Supply Voltage	V_{DD}	2.3	2.7	V	
I/O Supply Voltage	V_{DDQ}	1.65	2.7	V	
Input High Voltage: Logic 1; All inputs	V_{IH}	1.25	V_{DD} + 0.3	V	22
Input Low Voltage: Logic 0; All inputs	V_{IL}	-0.3	+0.55	V	22
Data Output High Voltage: Logic 1; All inputs	V_{OH}	V_{DDQ} - 0.2	–	V	
Data Output Low Voltage: Logic 0; All inputs	V_{OL}	–	0.2	V	
Input Leakage Current: Any input 0V ≤ VIN ≤ V_{DD} (All other pins not under test = 0V)	I_I	-2	2	µA	
Output Leakage Current: DQs are disabled; 0V ≤ VOUT ≤ V_{DDQ}	I_{OZ}	-5	5	µA	

Micron Technology, Inc., reserves the right to change products or specifications without notice.
©2001 Micron Technology, Inc. All rights reserved.

Table 14: Electrical Characteristics and Recommended AC Operating Conditions

Notes: 5, 6, 7, 8, 9, 11; notes appear on page 42

AC CHARACTERISTICS PARAMETER		SYMBOL	-8		-10		UNITS	NOTES
			MIN	MAX	MIN	MAX		
Access time from CLK (pos. edge)	CL = 3	^{t}AC (3)		7		7	ns	
	CL = 2	^{t}AC (2)		8		8	ns	
	CL = 1	^{t}AC (1)		19		22	ns	
Address hold time		^{t}AH	1		1		ns	
Address setup time		^{t}AS	2.5		2.5		ns	
CLK high-level width		^{t}CH	3		3		ns	
CLK low-level width		^{t}CL	3		3		ns	
Clock cycle time	CL = 3	^{t}CK (3)	8		10		ns	23
	CL = 2	^{t}CK (2)	10		12		ns	23
	CL = 1	^{t}CK (1)	20		25		ns	23
CKE hold time		^{t}CKH	1		1		ns	
CKE setup time		^{t}CKS	2.5		2.5		ns	
CS#, RAS#, CAS#, WE#, DQM hold time		^{t}CMH	1		1		ns	
CS#, RAS#, CAS#, WE#, DQM setup time		^{t}CMS	2.5		2.5		ns	
Data-in hold time		^{t}DH	1		1		ns	
Data-in setup time		^{t}DS	2.5		2.5		ns	
Data-out high-impedance time	CL = 3	^{t}HZ (3)		7		7	ns	10
	CL = 2	^{t}HZ (2)		8		8	ns	10
	CL = 1	^{t}HZ (1)		19		22	ns	10
Data-out low-impedance time		^{t}LZ	1		1		ns	
Data-out hold time (load)		^{t}OH	2.5		2.5		ns	27
Data-out hold time (no load)		^{tOH}N	1.8		1.8		ns	
ACTIVE to PRECHARGE command		^{t}RAS	48	120,000	50	120,000	ns	
ACTIVE to ACTIVE command period		^{t}RC	80		100		ns	
ACTIVE to READ or WRITE delay		^{t}RCD	20		20		ns	
Refresh period (4,096 rows)		^{t}REF		64		64	ms	
AUTO REFRESH command period		^{t}RFC	80		100		ns	
PRECHARGE command period		^{t}RP	20		20		ns	
ACTIVE bank a to ACTIVE bank b command		^{t}RRD	20		20		ns	
Transition time		^{t}T	0.5	1.2	0.5	1.2	ns	7
WRITE recovery time	Auto Precharge Mode	^{t}WR (a)	1 CLK +7ns		1 CLK +5ns		–	24
	Manual Precharge Mode	^{t}WR (m)	15		15		ns	25
Exit SELF REFRESH to ACTIVE command		^{t}XSR	80		100		ns	20

Micron Technology, Inc., reserves the right to change products or specifications without notice.
©2001 Micron Technology, Inc. All rights reserved.

Table 15: AC Functional Characteristics

Notes: 5, 6, 7, 8, 9, 11; notes appear on page 42

PARAMETER		SYMBOL	-8	-10	UNITS	NOTES
READ/WRITE command to READ/WRITE command		^{t}CCD	1	1	^{t}CK	17
CKE to clock disable or power-down entry mode		$^{t}CKED$	1	1	^{t}CK	14
CKE to clock enable or power-down exit setup mode		^{t}PED	1	1	^{t}CK	14
DQM to input data delay		^{t}DQD	0	0	^{t}CK	17
DQM to data mask during WRITEs		^{t}DQM	0	0	^{t}CK	17
DQM to data high-impedance during READs		^{t}DQZ	2	2	^{t}CK	17
WRITE command to input data delay		^{t}DWD	0	0	^{t}CK	17
Data-in to ACTIVE command		^{t}DAL	5	5	^{t}CK	15, 21
Data-in to PRECHARGE command		^{t}DPL	2	2	^{t}CK	16, 21
Last data-in to burst STOP command		^{t}BDL	1	1	^{t}CK	17
Last data-in to new READ/WRITE command		^{t}CDL	1	1	^{t}CK	17
Last data-in to PRECHARGE command		^{t}RDL	2	2	^{t}CK	16, 21
LOAD MODE REGISTER command to ACTIVE or REFRESH command		^{t}MRD	2	2	^{t}CK	26
Data-out to high-impedance from PRECHARGE command	CL = 3	$^{t}ROH(3)$	3	3	^{t}CK	17
	CL = 2	$^{t}ROH(2)$	2	2	^{t}CK	17
	CL = 1	$^{t}ROH(1)$	1	1	^{t}CK	17

Micron Technology, Inc., reserves the right to change products or specifications without notice.
©2001 Micron Technology, Inc. All rights reserved.

Table 16: IDD Specifications and Conditions (x16)

Notes: 1, 3, 6, 11, 13, 31 ; notes appear on page 42; VDD = VDDQ = +3.3V ±0.3V or VDD = VDDQ = 2.5V ±0.2V or VDD = +2.5V ±0.2V, VDDQ = +1.8V ±0.15V

PARAMETER/CONDITION		SYMBOL	MAX -8	MAX -10	UNITS	NOTES
Operating Current: Active Mode; Burst = 2; READ or WRITE; $^tRC = {}^tRC$ (MIN)		I_{DD1}	130	100	mA	18, 19
Standby Current: Power-Down Mode; All banks idle; CKE = LOW		I_{DD2}	350	350	µA	12, 33
Standby Current: Active Mode; CKE = HIGH; CS# = HIGH; All banks active after ^tRCD met; No accesses in progress		I_{DD3}	35	30	mA	19
Operating Current: Burst Mode; Page burst; READ or WRITE; All banks active		I_{DD4}	100	95	mA	18, 19
Auto Refresh Current CKE = HIGH; CS# = HIGH	$^tRFC = {}^tRFC$ (MIN)	I_{DD5}	210	170	mA	12, 18, 19, 32, 33
	^tRFC = 15.625µs	I_{DD6}	3	3	mA	

Table 17: IDD7 Self Refresh Current Options (x16)

(Notes: 4 appears on page 42) VDD = VDDQ = +3.3V ±0.3V or VDD = VDDQ = 2.5V ±0.2V or VDD = +2.5V ±0.2V, VDDQ = +1.8V ±0.15V

TEMPERATURE COMPENSATED SELF REFRESH PARAMETER/CONDITION	MAX TEMPERATURE	-8 AND -10	UNITS
Self Refresh Current: CKE < 0.2V	85°C	800	µA
	70°C	500	µA
	45°C	350	µA
	15°C	300	µA

Micron Technology, Inc., reserves the right to change products or specifications without notice.
©2001 Micron Technology, Inc. All rights reserved.

Table 18: IDD Specifications And Conditions (x32)

(Notes: 1, 3, 6, 11, 13, 31 ; notes appear on page 42; VDD = VDDQ = +3.3V ±0.3V or VDD = VDDQ = 2.5V ±0.2V or VDD = +2.5V ±0.2V, VDDQ = +1.8V ±0.15V

PARAMETER/CONDITION		SYMBOL	MAX -8	MAX -10	UNITS	NOTES
Operating Current: Active Mode; Burst = 2; READ or WRITE; ^{t}RC = ^{t}RC (MIN)		IDD1	150	120	mA	18, 19
Standby Current: Power-Down Mode; All banks idle; CKE = LOW		IDD2	350	350	µA	12, 33
Standby Current: Active Mode; CKE = HIGH; CS# = HIGH; All banks active after ^{t}RCD met; No accesses in progress		IDD3	40	35	mA	19
Operating Current: Burst Mode; Page burst; READ or WRITE; All banks active		IDD4	115	110	mA	18, 19
Auto Refresh Current CKE = HIGH; CS# = HIGH	^{t}RFC = ^{t}RFC (MIN)	IDD5	220	180	mA	12, 18, 19, 32, 33
	^{t}RFC = 15.625µs	IDD6	3	3	mA	

Table 19: IDD7 Self Refresh Current Options (x32)

(Notes: 4 appears on page 42) VDD = VDDQ = +3.3V ±0.3V or VDD = VDDQ = 2.5 ±0.2V or VDD = +2.5V ±0.2V, VDDQ = +1.8V ±0.15V

TEMPERATURE COMPENSATED SELF REFRESH PARAMETER/CONDITION	MAX TEMPERATURE	-8 AND -10	UNITS
Self Refresh Current: CKE < 0.2V	85°C	1000	µA
	70°C	550	µA
	45°C	400	µA
	15°C	350	µA

Table 20: Capacitance

(Note; 2 notes appear on page 42)

PARAMETER	SYMBOL	MIN	MAX	UNITS	NOTES
Input Capacitance: CLK	CI1	2.5	3.5	pF	28
Input Capacitance: All other input-only pins	CI2	2.5	3.8	pF	29
Input/Output Capacitance: DQs	CIO	4.0	6.0	pF	30

Micron Technology, Inc., reserves the right to change products or specifications without notice.
©2001 Micron Technology, Inc. All rights reserved.

Notes

1. All voltages are referenced to Vss
2. This parameter is sampled. VDD, VDDQ = +3.3V; = 25°C; pin under test biased at 1.4V. f = 1 MHz, TA
3. IDD is dependent on output loading and cycle rates. Specified values are obtained with minimum cycle time and the outputs open.
4. Enables on-chip refresh and address counters.
5. The minimum specifications are used only to indicate cycle time at which proper operation over the full operational temperature range is ensured (^{T}A = Commercial, IT or XT).
6. An initial pause of 100µs is required after power-up, followed by two AUTO REFRESH commands, before proper device operation is ensured. (VDD and VDDQ must be powered up simultaneously. VSS and VSSQ must be at same potential.) The two AUTO REFRESH command wake-ups should be repeated any time the ^{t}REF refresh requirement is exceeded.
7. AC characteristics assume ^{t}T = 1ns.
8. In addition to meeting the transition rate specification, the clock and CKE must transit between VIH and VIL (or between VIL and VIH) in a monotonic manner.
9. Outputs measured at 1.5V (for LC, G devices) or at 1.25V (V devices)with equivalent load:

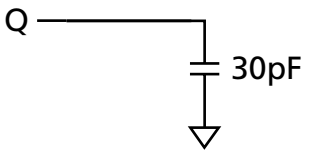

10. ^{t}HZ defines the time at which the output achieves the open circuit condition; it is not a reference to VOH or VOL. The last valid data element will meet ^{t}OH before going High-Z.
11. AC timing and IDD tests use established values for VIL and VIH, with timing referenced to VIH/2 crossover point. If the input transition time is longer than 1ns, then the timing is referenced at VIL(MAX) and VIH(MIN) and no longer at the VIH/2 crossover point. Established tester values follow: VIL = 0V, VIH = 3.0V for LC devices, VIH = 2.7V for G devices, and VIH = 2.3V for V devices.
12. Other input signals are allowed to transition no more than once every two clocks and are otherwise at valid VIH or VIL levels.
13. IDD specifications are tested after the device is properly initialized.
14. Timing actually specified by ^{t}CKS; clock(s) specified as a reference only at minimum cycle rate.
15. Timing actually specified by ^{t}WR plus ^{t}RP; clock(s) specified as a reference only at minimum cycle rate.
16. Timing actually specified by ^{t}WR.
17. Required clocks are specified by JEDEC functionality and are not dependent on any timing parameter.
18. The IDD current will increase or decrease proportionally according to the amount of frequency alteration for the test condition.
19. Address transitions average one transition every two clocks.
20. CLK must be toggled a minimum of two times during this period.
21. Based on ^{t}CK = 125MHz for -8 and ^{t}CK = 100MHz for -10.
22. VIH overshoot: VIH (MAX) = VDDQ + 2V for a pulse width ≤ 3ns, and the pulse width cannot be greater than one third of the cycle rate. VIL undershoot: VIL (MIN) = -2V for a pulse width ≤ 3ns.
23. The clock frequency must remain constant (stable clock is defined as a signal cycling within timing constraints specified for the clock pin) during access or precharge states (READ, WRITE, including ^{t}WR, and PRECHARGE commands). CKE may be used to reduce the data rate.
24. Auto precharge mode only. The precharge timing budget (^{t}RP) begins at **5.4ns** for -8 after the first clock delay, after the last WRITE is executed.
25. Precharge mode only.
26. JEDEC and PC100 specify three clocks.
27. Parameter guaranteed by design.
28. PC100 specifies a maximum of 4pF.
29. PC100 specifies a maximum of 5pF.
30. PC100 specifies a maximum of 6.5pF.
31. For -8, CL = 2 and ^{t}CK = 10ns; for -10, CL = 3 and ^{t}CK =10ns.
32. CKE is HIGH during refresh command period ^{t}RFC (MIN) else CKE is LOW. The IDD6 limit is actually a nominal value and does not result in a fail value.
33. Specified with I/O's in steady state condition.

Micron Technology, Inc., reserves the right to change products or specifications without notice.
©2001 Micron Technology, Inc. All rights reserved.

Figure 33: Initialize and Load Mode Register[1,2]

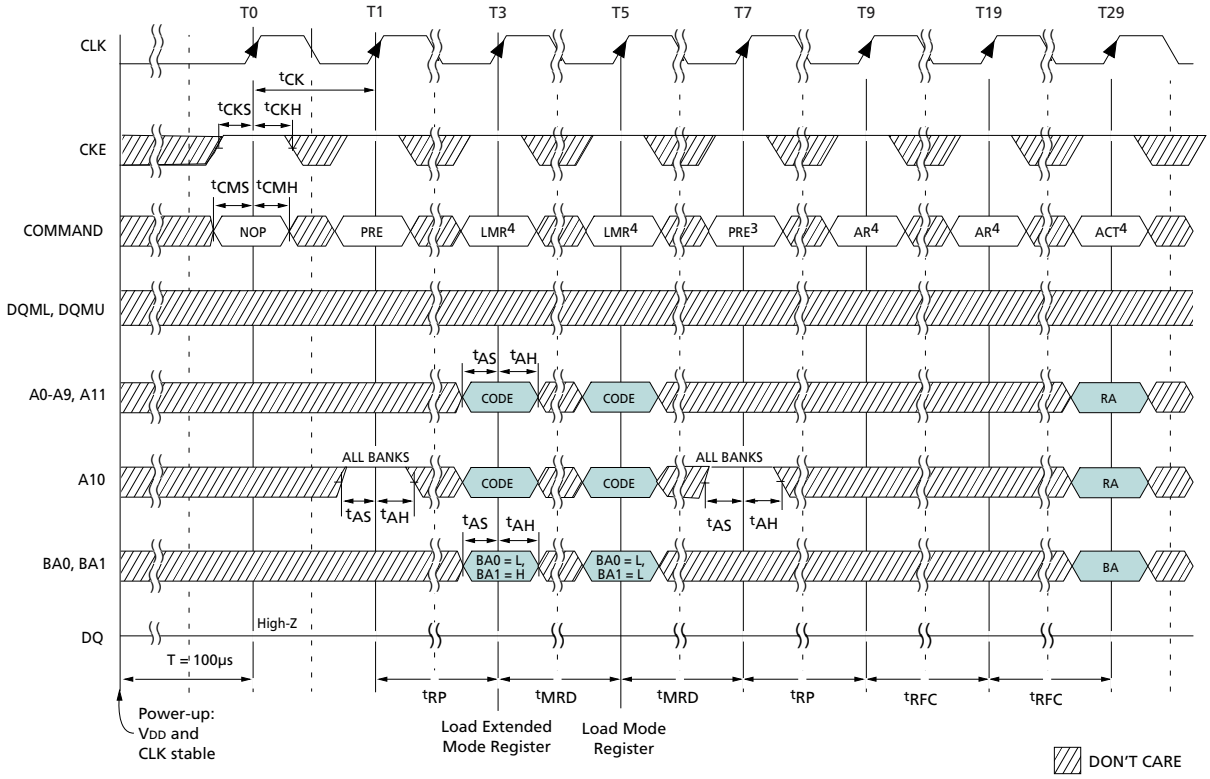

NOTE:

1. The two AUTO REFRESH commands at T9 and T19 may be applied before either LOAD MODE REGISTER (LMR) command.
2. PRE = PRECHARGE command, LMR = LOAD MODE REGISTER command, AR = AUTO REFRESH command, ACT = ACTIVE command, RA = Row Address, BA = Bank Address
3. Optional refresh command.
4. The Load Mode Register for both MR/EMR and 2 Auto Refresh commands can be in any order. However, all must occur prior to an Active command.

SYMBOL[1]	-8		-10		UNITS
	MIN	MAX	MIN	MAX	
^{t}AH	1		1		ns
^{t}AS	2.5		2.5		ns
^{t}CH	3		3		ns
^{t}CL	3		3		ns
^{t}CK (3)	8		10		ns
^{t}CK (2)	10		12		ns
^{t}CK (1)	20		25		ns

SYMBOL	-8		-10		UNITS
	MIN	MAX	MIN	MAX	
^{t}CKH	1		1		ns
^{t}CKS	2.5		2.5		ns
^{t}CMH	1		1		ns
^{t}CMS	2.5		2.5		ns
^{t}MRD	2		2		^{t}CK
^{t}RFC	80		100		ns
^{t}RP	20		20		ns

NOTE:

1. CAS latency indicated in parentheses.

Micron Technology, Inc., reserves the right to change products or specifications without notice.
©2001 Micron Technology, Inc. All rights reserved.

Figure 34: Power-down Mode[1]

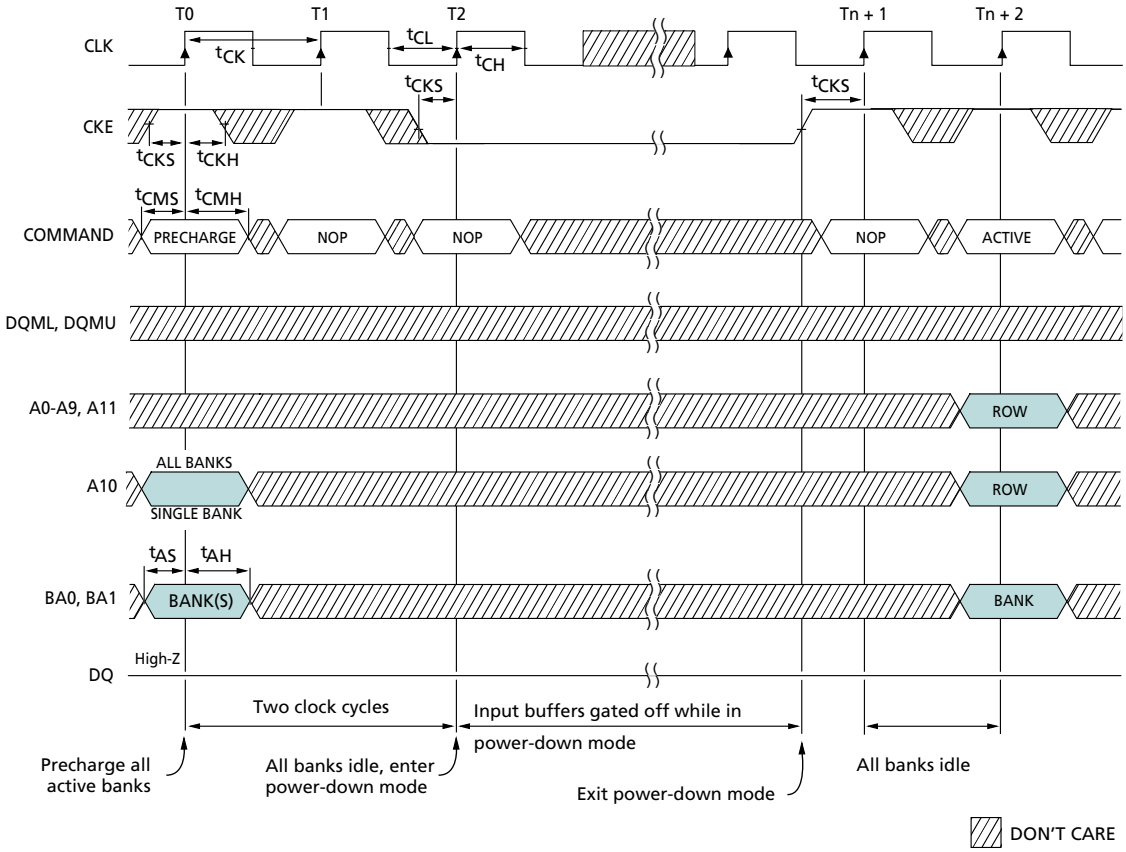

NOTE:
1. Violating refresh requirements during power-down may result in a loss of data.

SYMBOL[1]	-8 MIN	-8 MAX	-10 MIN	-10 MAX	UNITS
^{t}AH	1		1		ns
^{t}AS	2.5		2.5		ns
^{t}CH	3		3		ns
^{t}CL	3		3		ns
^{t}CK (3)	8		10		ns
^{t}CK (2)	10		12		ns
^{t}CK (1)	20		25		ns

SYMBOL*	-8 MIN	-8 MAX	-10 MIN	-10 MAX	UNITS
^{t}CKH	1		1		ns
^{t}CKS	2.5		2.5		ns
^{t}CMH	1		1		ns
^{t}CMS	2.5		2.5		ns
^{t}MRD	2		2		^{t}CK
^{t}RFC	80		100		ns
^{t}RP	20		20		ns

NOTE:
1. CAS latency indicated in parentheses.

Micron Technology, Inc., reserves the right to change products or specifications without notice.
©2001 Micron Technology, Inc. All rights reserved.

Figure 35: Clock Suspend Mode

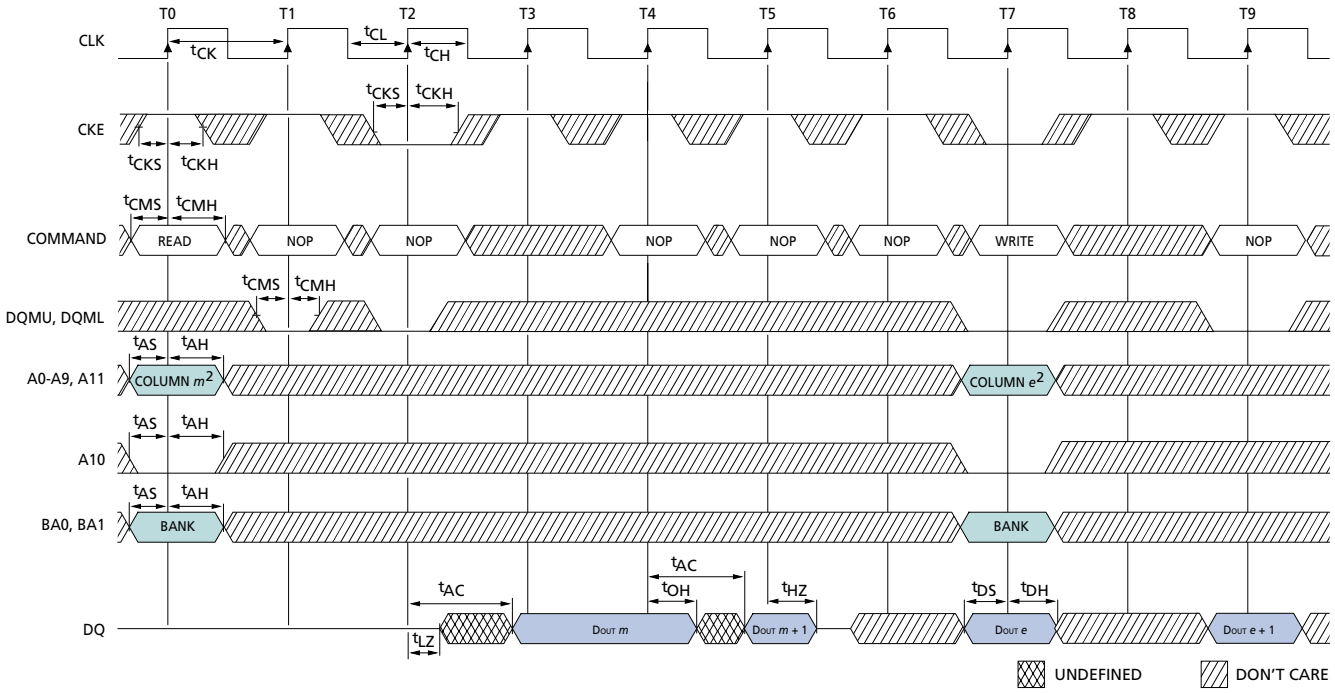

NOTE:

1. For this example, the burst length = 2, the CAS latency = 3, and auto precharge is disabled.
2. x16:A9 and A11 = "Don't Care"
   x32:A8, A9 and A11 = "Don't Care"

SYMBOL[1]	-8 MIN	-8 MAX	-10 MIN	-10 MAX	UNITS
^{t}AC (3)		7		7	ns
^{t}AC (2)		8		8	ns
^{t}AC (1)		19		22	ns
^{t}AH	1		1		ns
^{t}AS	2.5		2.5		ns
^{t}CH	3		3		ns
^{t}CL	3		3		ns
^{t}CK (3)	8		10		ns
^{t}CK (2)	10		12		ns
^{t}CK (1)	20		25		ns

SYMBOL*	-8 MIN	-8 MAX	-10 MIN	-10 MAX	UNITS
^{t}CKH	1		1		ns
^{t}CKS	2.5		2.5		ns
^{t}CMH	1		1		ns
^{t}CMS	2.5		2.5		ns
^{t}DH	1		1		ns
^{t}DS	2.5		2.5		ns
^{t}HZ (3)		7		7	ns
^{t}HZ (2)		8		8	ns
^{t}HZ (1)		19		22	ns
^{t}LZ	1		1		ns
^{t}OH	2.5		2.5		ns

NOTE:

1. CAS latency indicated in parentheses.

Micron Technology, Inc., reserves the right to change products or specifications without notice.
©2001 Micron Technology, Inc. All rights reserved.

Figure 36: Auto Refresh Mode

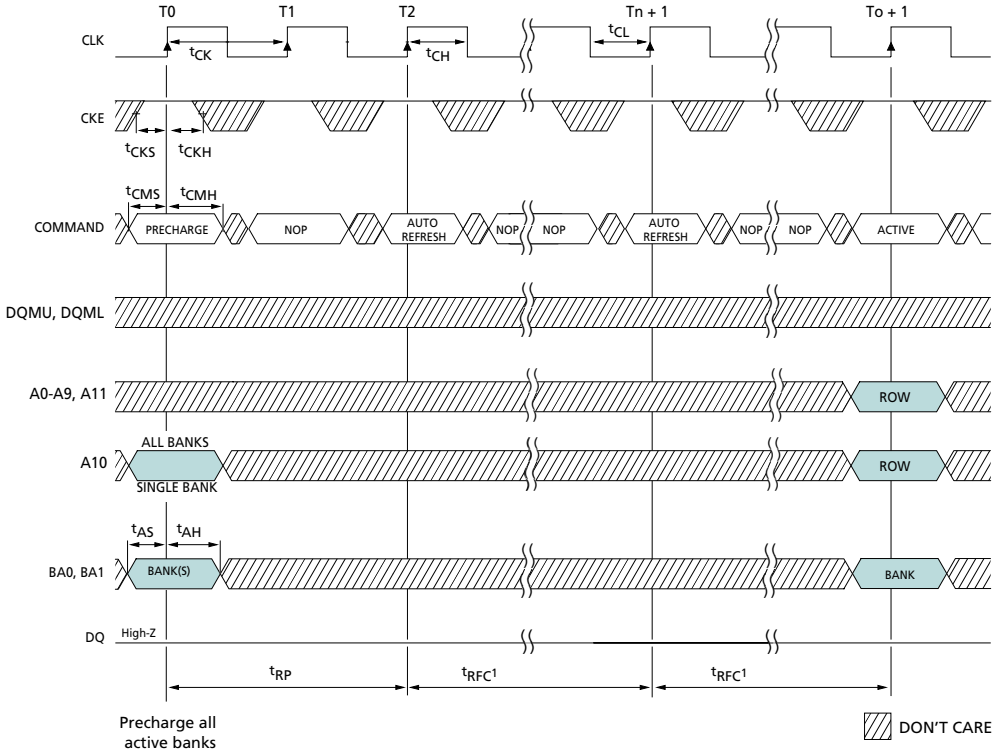

NOTE:

1. Each AUTO REFRESH command performs a refresh cycle. Back-to-back commands are not required.

.

SYMBOL[1]	-8 MIN	-8 MAX	-10 MIN	-10 MAX	UNITS
^{t}AH	1		1		ns
^{t}AS	2.5		2.5		ns
^{t}CH	3		3		ns
^{t}CL	3		3		ns
^{t}CK (3)	8		10		ns
^{t}CK (2)	10		12		ns
^{t}CK (1)	20		25		ns

SYMBOL	-8 MIN	-8 MAX	-10 MIN	-10 MAX	UNITS
^{t}CKH	1		1		ns
^{t}CKS	2.5		2.5		ns
^{t}CMH	1		1		ns
^{t}CMS	2.5		2.5		ns
^{t}MRD	2		2		^{t}CK
^{t}RFC	80		100		ns
^{t}RP	20		20		ns

NOTE:

1. CAS latency indicated in parentheses.

Micron Technology, Inc., reserves the right to change products or specifications without notice.
©2001 Micron Technology, Inc. All rights reserved.

Figure 37: Self Refresh Mode

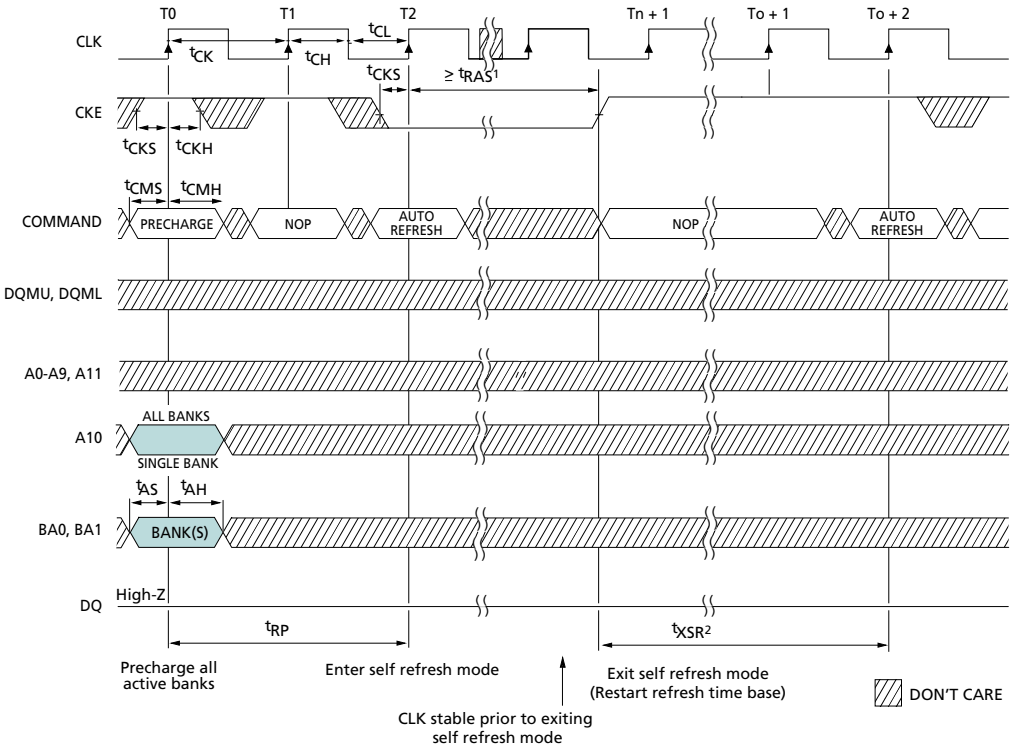

NOTE:

1. No maximum time limit for Self Refresh. ^{t}RAS (MAX) only applies to non-Self Refresh mode.
2. ^{t}XSR requires a minimum of two clocks regardless of frequency or timing.
3. As a general rule, any time Self Refresh is exited, the DRAM may not re-enter the Self Refresh Mode until all rows have been refreshed via the Auto Refresh command at the distributed refresh rate, ^{t}REF, or faster. However, the following exception is allowed. Self Refresh Mode may be re-entered any time after exiting, if the following conditions are all met:
   a.) The DRAM has been in the Self Refresh Mode for a minimum of 64ms prior to exiting.
   b.) ^{t}XSR has not been violated.
   c.) At least two Auto Refresh commands are performed during each 15.625us interval while the DRAM remains out of the Self Refresh mode.

SYMBOL	-8		-10		UNITS
	MIN	MAX	MIN	MAX	
^{t}AH	1		1		ns
^{t}AS	2.5		2.5		ns
^{t}CH	3		3		ns
^{t}CL	3		3		ns
^{t}CK (3)	8		10		ns
^{t}CK (2)	10		12		ns
^{t}CK (1)	20		25		ns

SYMBOL	-8		-10		UNITS
	MIN	MAX	MIN	MAX	
^{t}CKH	1		1		ns
^{t}CKS	2.5		2.5		ns
^{t}CMH	1		1		ns
^{t}CMS	2.5		2.5		ns
^{t}RAS	48	120,000	50	120,000	ns
^{t}RP	20		20		ns
^{t}XSR	80		100		ns

Micron Technology, Inc., reserves the right to change products or specifications without notice.
©2001 Micron Technology, Inc. All rights reserved.

Figure 38: READ – Without Auto Precharge1

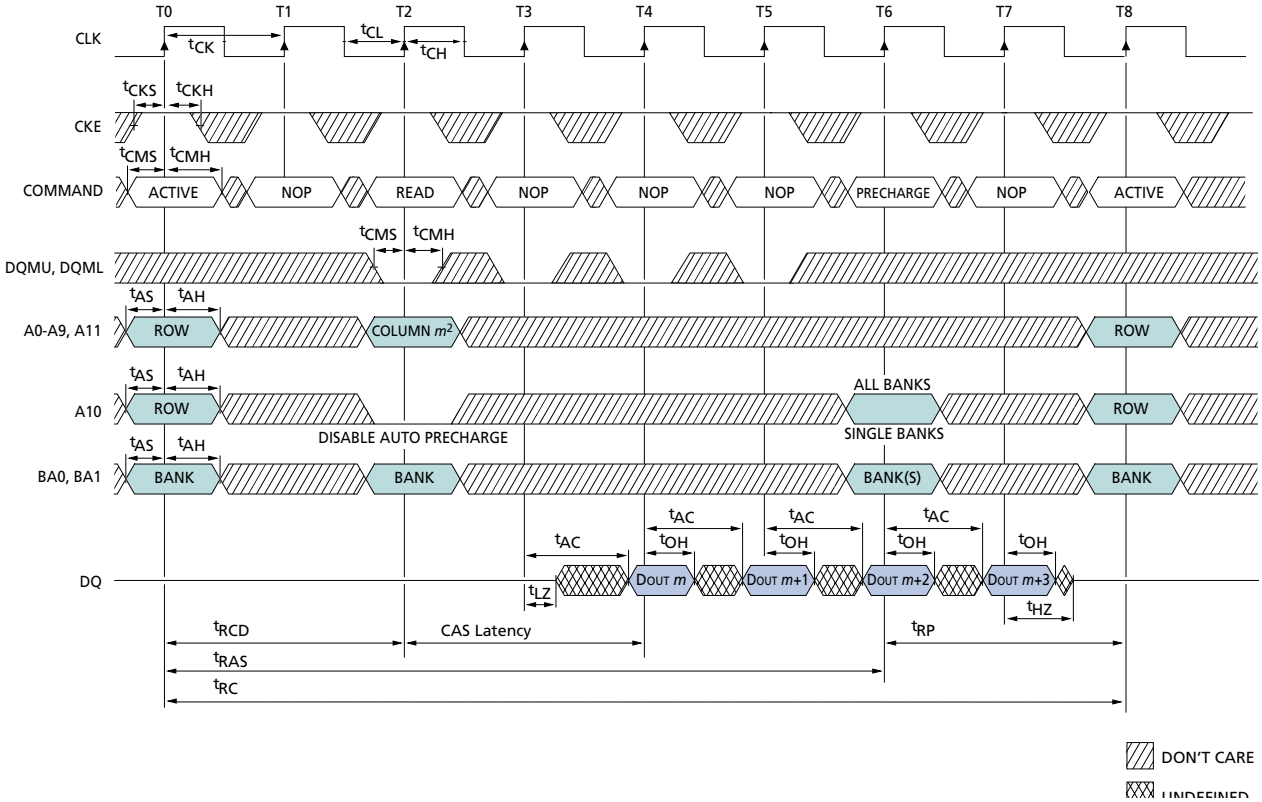

NOTE:

1. For this example, the burst length = 4, the CAS latency = 2, and the READ burst is followed by a "manual" PRECHARGE.
2. x16:A9 and A11 = "Don't Care"
   x32:A8, A9,and A11 = "Don't Care"

	-8		-10		
SYMBOL[1]	MIN	MAX	MIN	MAX	UNITS
^{t}AC (3)		7		7	ns
^{t}AC (2)		8		8	ns
^{t}AC (1)		19		22	ns
^{t}AH	1		1		ns
^{t}AS	2.5		2.5		ns
^{t}CH	3		3		ns
^{t}CL	3		3		ns
^{t}CK (3)	8		10		ns
^{t}CK (2)	10		12		ns
^{t}CK (1)	20		25		ns
^{t}CKH	1		1		ns
^{t}CKS	2.5		2.5		ns
^{t}CMH	1		1		ns

NOTE:

1. CAS latency indicated in parentheses.

	-8		-10		
SYMBOL	MIN	MAX	MIN	MAX	UNITS
^{t}CKS	2.5		2.5		ns
^{t}CMH	1		1		ns
^{t}CMS	2.5		2.5		ns
^{t}HZ (3)		7		7	ns
^{t}HZ (2)		8		8	ns
^{t}HZ (1)		19		22	ns
^{t}LZ	1		1		ns
^{t}OH	2.5		2.5		ns
^{t}RAS	48	120,000	50	120,000	ns
^{t}RC	80		100		ns
^{t}RCD	20		20		ns
^{t}RP	20		20		ns

Micron Technology, Inc., reserves the right to change products or specifications without notice.
©2001 Micron Technology, Inc. All rights reserved.

Figure 39: Read – With Auto Precharge[1]

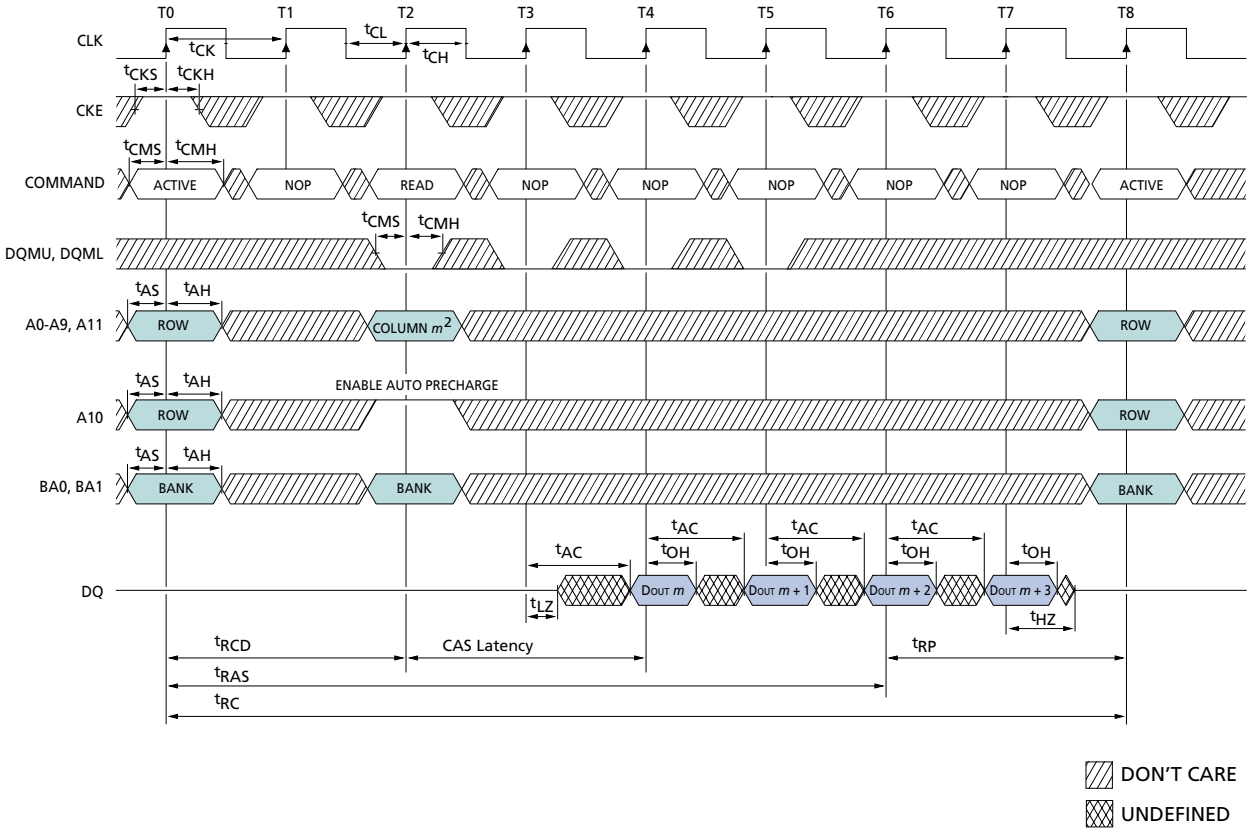

NOTE:
1. For this example, the burst length = 4, the CAS latency = 2.
2. x16:A9 and A11 = "Don't Care"
   x32:A8, A9,and A11 = "Don't Care"

SYMBOL[1]	-8 MIN	-8 MAX	-10 MIN	-10 MAX	UNITS
tAC (3)		7		7	ns
tAC (2)		8		8	ns
tAC (1)		19		22	ns
tAH	1		1		ns
tAS	2.5		2.5		ns
tCH	3		3		ns
tCL	3		3		ns
tCK (3)	8		10		ns
tCK (2)	10		12		ns
tCK (1)	20		25		ns
tCKH	1		1		ns
tCKS	2.5		2.5		ns
tCMH	1		1		ns

NOTE:
1. CAS latency indicated in parentheses.

SYMBOL	-8 MIN	-8 MAX	-10 MIN	-10 MAX	UNITS
tCKS	2.5		2.5		ns
tCMH	1		1		ns
tCMS	2.5		2.5		ns
tHZ (3)		7		7	ns
tHZ (2)		8		8	ns
tHZ (1)		19		22	ns
tLZ	1		1		ns
tOH	2.5		2.5		ns
tRAS	48	120,000	50	120,000	ns
tRC	80		100		ns
tRCD	20		20		ns
tRP	20		20		ns

Micron Technology, Inc., reserves the right to change products or specifications without notice.
©2001 Micron Technology, Inc. All rights reserved.

Figure 40: Single Read – Without Auto Precharge[1]

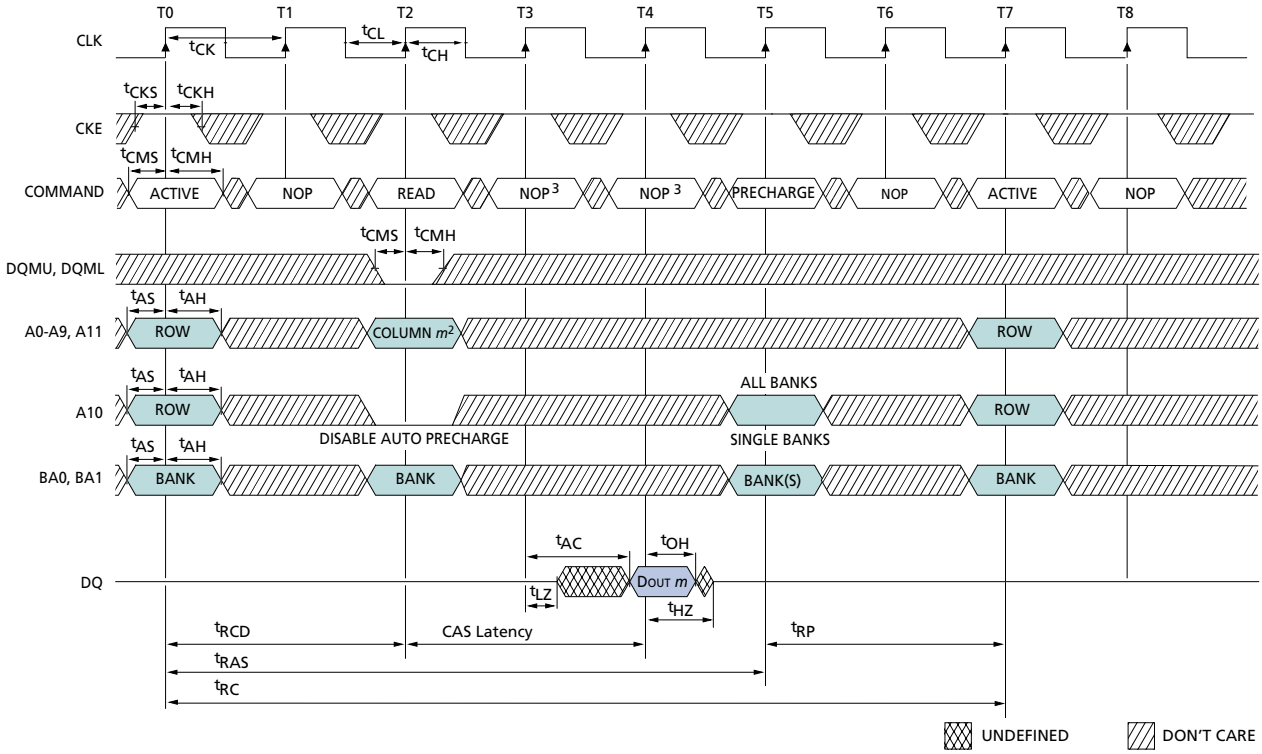

NOTE:

1. For this example, the burst length = 4, the CAS latency = 2, and the READ burst is followed by a "manual" PRECHARGE.
2. x16:A9 and A11 = "Don't Care"
   x32:A8, A9,and A11 = "Don't Care"
3. PRECHARGE command not allowed or ^{t}RAS would be violated.

SYMBOL[1]	-8 MIN	-8 MAX	-10 MIN	-10 MAX	UNITS
^{t}AC (3)		7		7	ns
^{t}AC (2)		8		8	ns
^{t}AC (1)		19		22	ns
^{t}AH	1		1		ns
^{t}AS	2.5		2.5		ns
^{t}CH	3		3		ns
^{t}CL	3		3		ns
^{t}CK (3)	8		10		ns
^{t}CK (2)	10		12		ns
^{t}CK (1)	20		25		ns
^{t}CKH	1		1		ns
^{t}CKS	2.5		2.5		ns
^{t}CMH	1		1		ns

SYMBOL	-8 MIN	-8 MAX	-10 MIN	-10 MAX	UNITS
^{t}CKS	2.5		2.5		ns
^{t}CMH	1		1		ns
^{t}CMS	2.5		2.5		ns
^{t}HZ (3)		7		7	ns
^{t}HZ (2)		8		8	ns
^{t}HZ (1)		19		22	ns
^{t}LZ	1		1		ns
^{t}OH	2.5		2.5		ns
^{t}RAS	48	120,000	50	120,000	ns
^{t}RC	80		100		ns
^{t}RCD	20		20		ns
^{t}RP	20		20		ns

NOTE:

1. CAS latency indicated in parentheses.

Micron Technology, Inc., reserves the right to change products or specifications without notice.
©2001 Micron Technology, Inc. All rights reserved.

Figure 41: Single Read – With Auto Precharge[1]

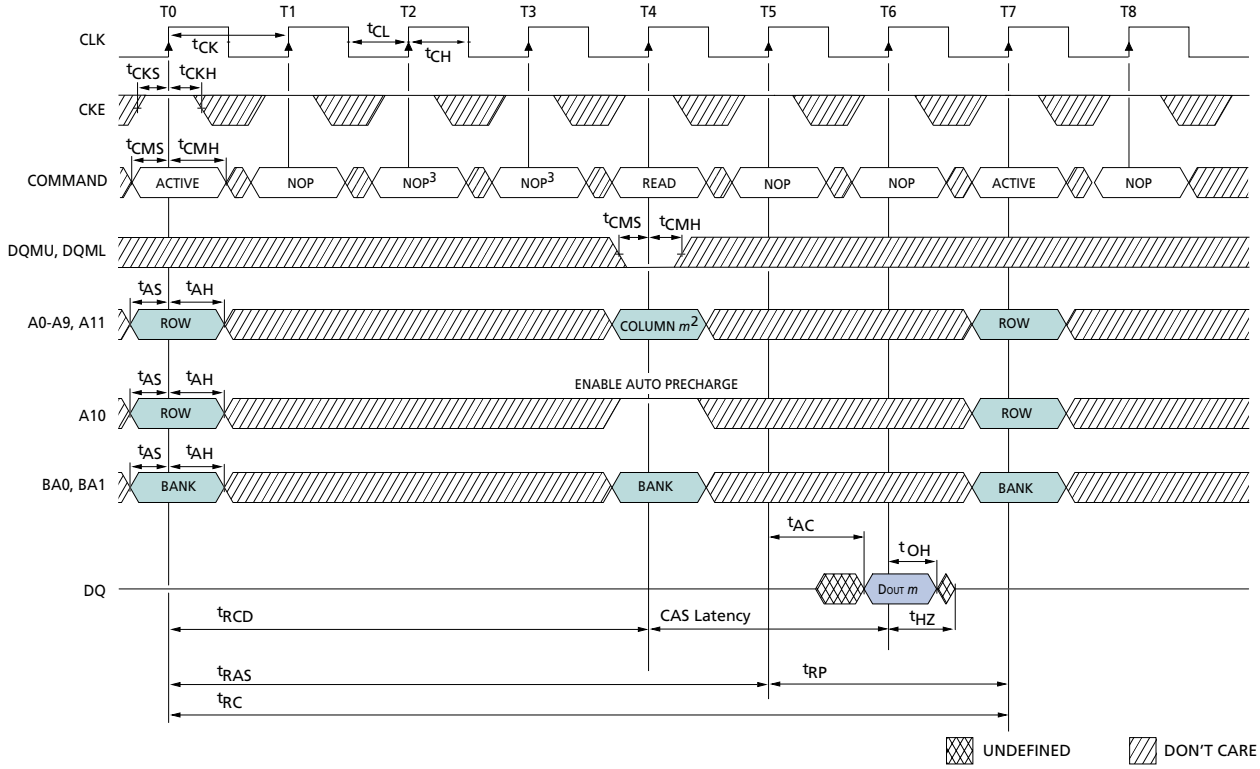

NOTE:

1. For this example, the burst length = 4, the CAS latency = 2, and the READ burst is followed by a "manual" PRECHARGE.
2. x16:A9 and A11 = "Don't Care"
   x32:A8, A9,and A11 = "Don't Care"
3. PRECHARGE command not allowed or ^{t}RAS would be violated.

	-8		-10		
SYMBOL[1]	MIN	MAX	MIN	MAX	UNITS
^{t}AC (3)		7		7	ns
^{t}AC (2)		8		8	ns
^{t}AC (1)		19		22	ns
^{t}AH	1		1		ns
^{t}AS	2.5		2.5		ns
^{t}CH	3		3		ns
^{t}CL	3		3		ns
^{t}CK (3)	8		10		ns
^{t}CK (2)	10		12		ns
^{t}CK (1)	20		25		ns
^{t}CKH	1		1		ns
^{t}CKS	2.5		2.5		ns
^{t}CMH	1		1		ns

	-8		-10		
SYMBOL	MIN	MAX	MIN	MAX	UNITS
^{t}CKS	2.5		2.5		ns
^{t}CMH	1		1		ns
^{t}CMS	2.5		2.5		ns
^{t}HZ (3)		7		7	ns
^{t}HZ (2)		8		8	ns
^{t}HZ (1)		19		22	ns
^{t}LZ	1		1		ns
^{t}OH	2.5		2.5		ns
^{t}RAS	48	120,000	50	120,000	ns
^{t}RC	80		100		ns
^{t}RCD	20		20		ns
^{t}RP	20		20		ns

NOTE:

1. CAS latency indicated in parentheses.

Micron Technology, Inc., reserves the right to change products or specifications without notice.
©2001 Micron Technology, Inc. All rights reserved.

Figure 42: Alternating Bank Read Accesses[1]

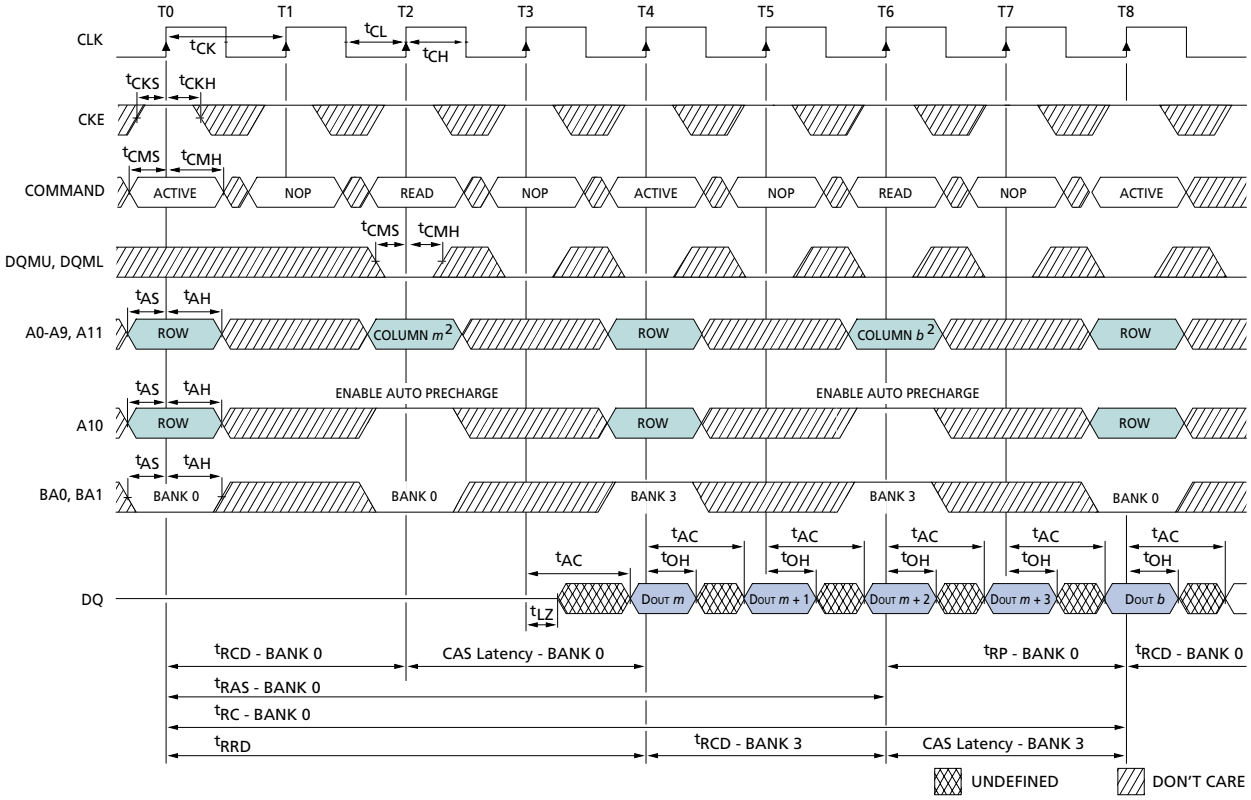

NOTE:
1. For this example, the burst length = 4, the CAS latency = 2.
2. x16:A9 and A11 = "Don't Care"
   x32:A8, A9,and A11 = "Don't Care."

SYMBOL[1]	-8 MIN	-8 MAX	-10 MIN	-10 MAX	UNITS
^tAC (3)		7		7	ns
^tAC (2)		8		8	ns
^tAC (1)		19		22	ns
^tAH	1		1		ns
^tAS	2.5		2.5		ns
^tCH	3		3		ns
^tCL	3		3		ns
^tCK (3)	8		10		ns
^tCK (2)	10		12		ns
^tCK (1)	20		25		ns
^tCKH	1		1		ns
^tCKS	2.5		2.5		ns
^tCMH	1		1		ns

SYMBOL	-8 MIN	-8 MAX	-10 MIN	-10 MAX	UNITS
^tCKS	2.5		2.5		ns
^tCMH	1		1		ns
^tCMS	2.5		2.5		ns
^tHZ (3)		7		7	ns
^tHZ (2)		8		8	ns
^tHZ (1)		19		22	ns
^tLZ	1		1		ns
^tOH	2.5		2.5		ns
^tRAS	48	120,000	50	120,000	ns
^tRC	80		100		ns
^tRCD	20		20		ns
^tRP	20		20		ns
^tRRD	20		20		ns

NOTE:
1. CAS latency indicated in parentheses.

Micron Technology, Inc., reserves the right to change products or specifications without notice.
©2001 Micron Technology, Inc. All rights reserved.

Figure 43: Read – Full-page Burst[1]

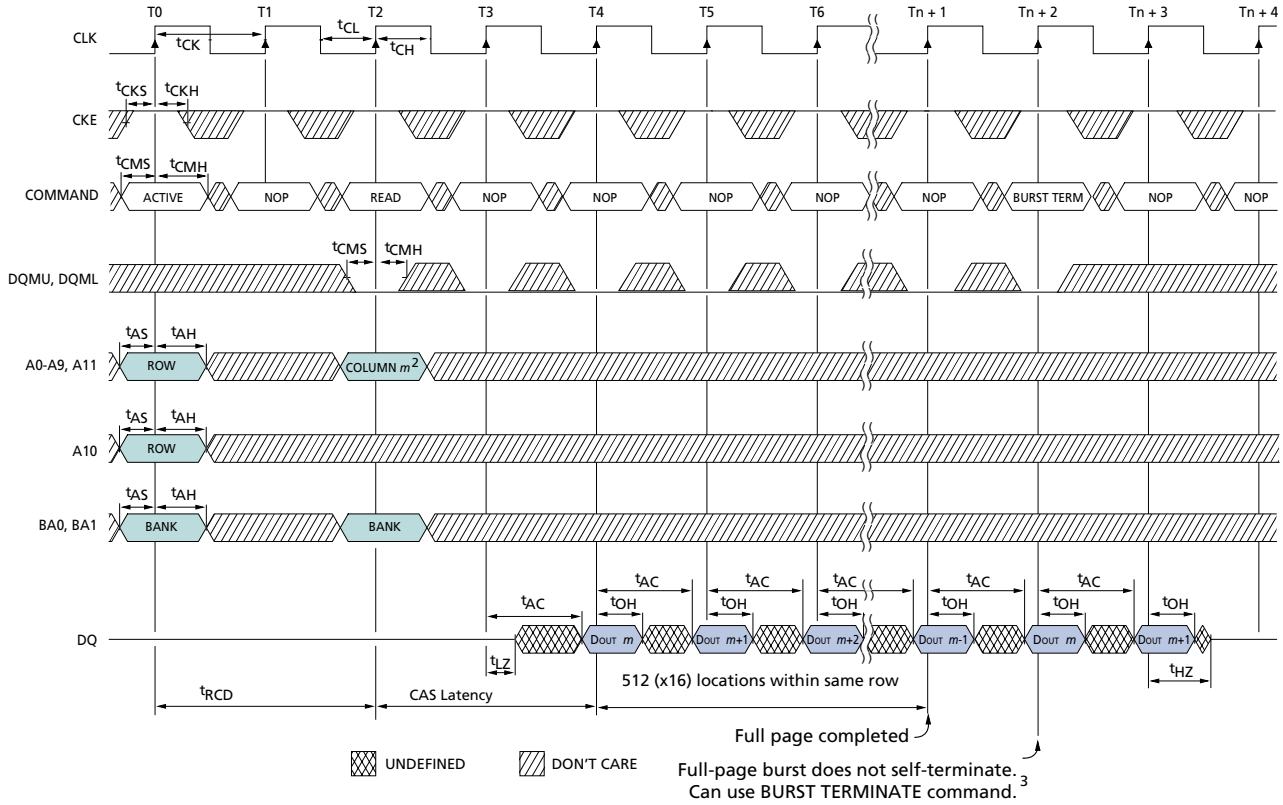

NOTE:

1. For this example, the CAS latency = 2.
2. x16:A9 and A11 = "Don't Care"
   x32:A8, A9,and A11 = "Don't Care"
3. Page left open; no ^{t}RP.

SYMBOL[1]	-8 MIN	-8 MAX	-10 MIN	-10 MAX	UNITS
^{t}AC (3)		7		7	ns
^{t}AC (2)		8		8	ns
^{t}AC (1)		19		22	ns
^{t}AH	1		1		ns
^{t}AS	2.5		2.5		ns
^{t}CH	3		3		ns
^{t}CL	3		3		ns
^{t}CK (3)	8		10		ns
^{t}CK (2)	10		12		ns
^{t}CK (1)	20		25		ns
^{t}CKH	1		1		ns
^{t}CKS	2.5		2.5		ns
^{t}CMH	1		1		ns

SYMBOL	-8 MIN	-8 MAX	-10 MIN	-10 MAX	UNITS
^{t}CKS	2.5		2.5		ns
^{t}CMH	1		1		ns
^{t}CMS	2.5		2.5		ns
^{t}HZ (3)		7		7	ns
^{t}HZ (2)		8		8	ns
^{t}HZ (1)		19		22	ns
^{t}LZ	1		1		ns
^{t}OH	2.5		2.5		ns
^{t}RAS	48	120,000	50	120,000	ns
^{t}RC	80		100		ns
^{t}RCD	20		20		ns
^{t}RP	20		20		ns
^{t}RRD	20		20		ns

NOTE:

1. CAS latency indicated in parentheses.

Micron Technology, Inc., reserves the right to change products or specifications without notice.
©2001 Micron Technology, Inc. All rights reserved.

Figure 44: Read – DQM Operation[1]

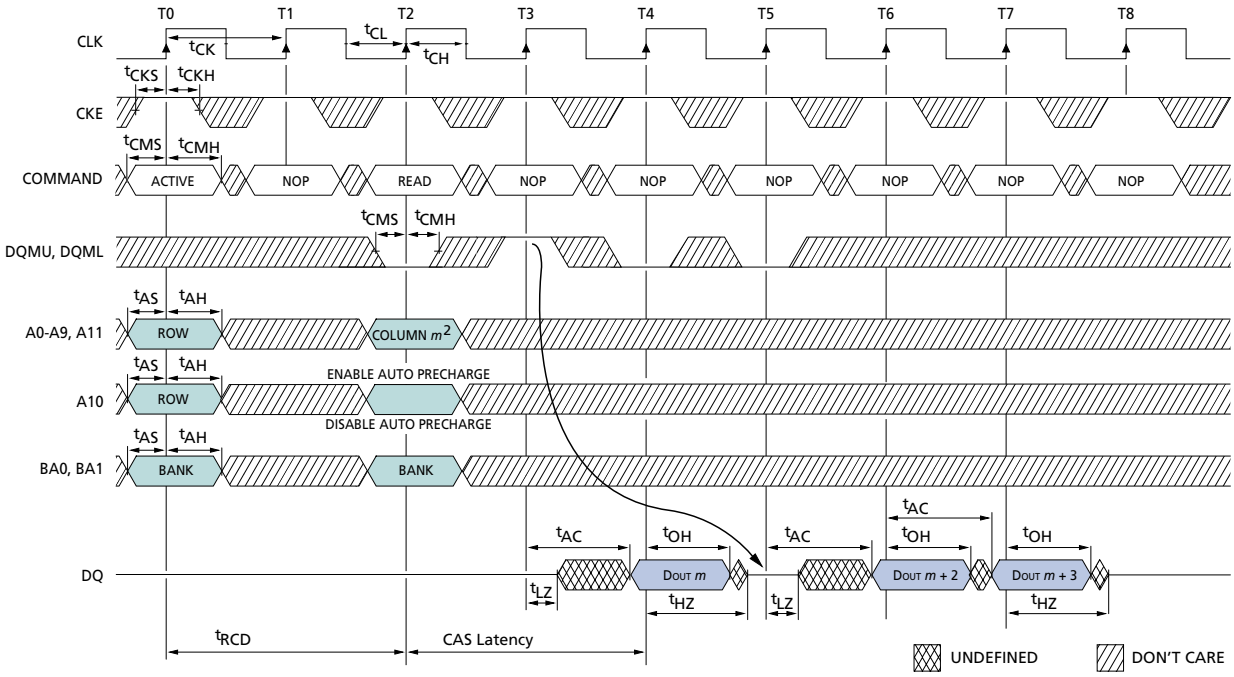

NOTE:

1. For this example, the CAS latency = 2.
2. x16:A9 and A11 = "Don't Care"
   x32:A8, A9,and A11 = "Don't Care"

SYMBOL[1]	-8 MIN	-8 MAX	-10 MIN	-10 MAX	UNITS
^{t}AC (3)		7		7	ns
^{t}AC (2)		8		8	ns
^{t}AC (1)		19		22	ns
^{t}AH	1		1		ns
^{t}AS	2.5		2.5		ns
^{t}CH	3		3		ns
^{t}CL	3		3		ns
^{t}CK (3)	8		10		ns
^{t}CK (2)	10		12		ns
^{t}CK (1)	20		25		ns
^{t}CKH	1		1		ns
^{t}CKS	2.5		2.5		ns
^{t}CMH	1		1		ns

SYMBOL	-8 MIN	-8 MAX	-10 MIN	-10 MAX	UNITS
^{t}CKS	2.5		2.5		ns
^{t}CMH	1		1		ns
^{t}CMS	2.5		2.5		ns
^{t}HZ (3)		7		7	ns
^{t}HZ (2)		8		8	ns
^{t}HZ (1)		19		22	ns
^{t}LZ	1		1		ns
^{t}OH	2.5		2.5		ns
^{t}RAS	48	120,000	50	120,000	ns
^{t}RC	80		100		ns
^{t}RCD	20		20		ns
^{t}RP	20		20		ns
^{t}RRD	20		20		ns

NOTE:

1. CAS latency indicated in parentheses.

Micron Technology, Inc., reserves the right to change products or specifications without notice.
©2001 Micron Technology, Inc. All rights reserved.

Figure 45: Write – Without Auto Precharge[1]

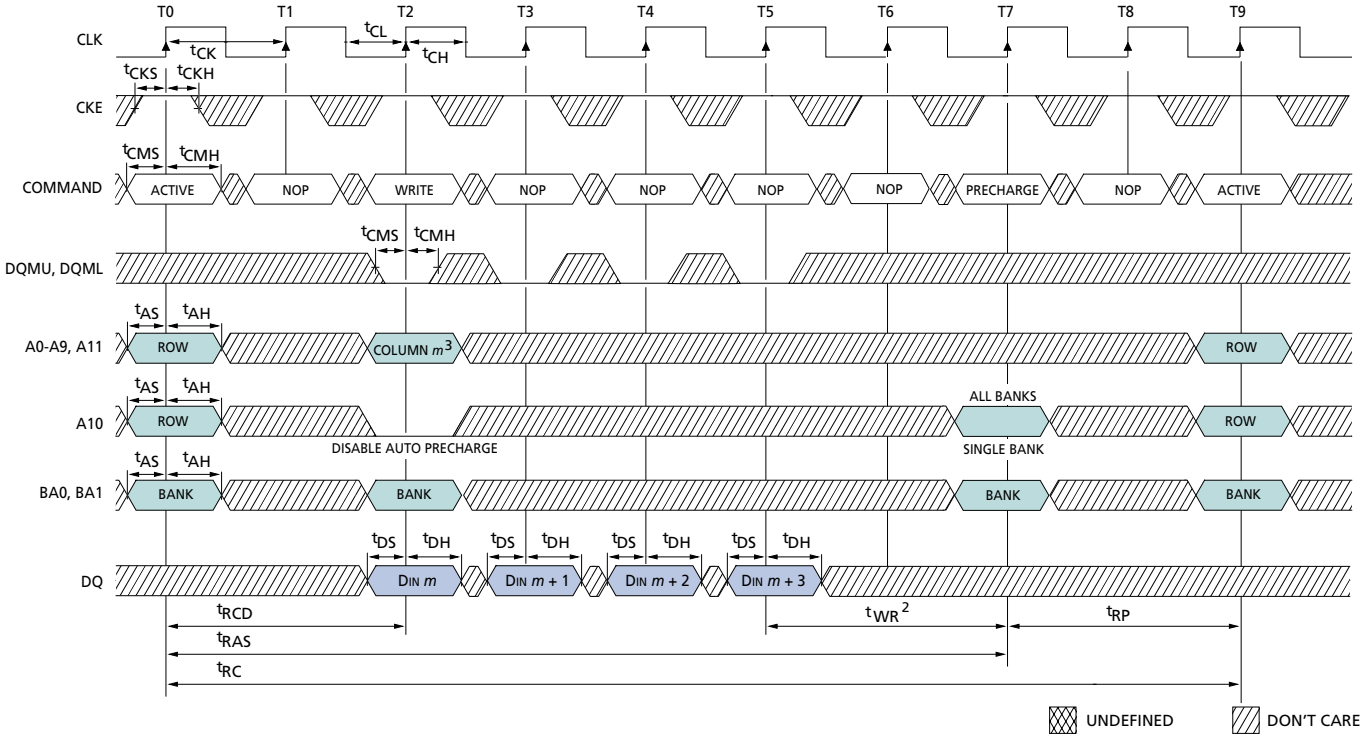

NOTE:

1. For this example, the burst length = 4, and the WRITE burst is followed by a "manual" PRECHARGE.
2. 15ns is required between <DIN m + 3> and the PRECHARGE command, regardless of frequency.
3. x16: A9 and A11 = "Don't Care"
   x32: A8, A9,and A11 = "Don't Care"

SYMBOL[1]	-8 MIN	-8 MAX	-10 MIN	-10 MAX	UNITS
^{t}AC (3)		7		7	ns
^{t}AC (2)		8		8	ns
^{t}AC (1)		19		22	ns
^{t}AH	1		1		ns
^{t}AS	2.5		2.5		ns
^{t}CH	3		3		ns
^{t}CL	3		3		ns
^{t}CK (3)	8		10		ns
^{t}CK (2)	10		12		ns
^{t}CK (1)	20		25		ns
^{t}CKH	1		1		ns

SYMBOL	-8 MIN	-8 MAX	-10 MIN	-10 MAX	UNITS
^{t}CKS	2.5		2.5		ns
^{t}CMH	1		1		ns
^{t}CMS	2.5		2.5		ns
^{t}DH	1		1		ns
^{t}DS	2.5		2.5		ns
^{t}RAS	48	120,000	50	120,000	ns
^{t}RC	80		100		ns
^{t}RCD	20		20		ns
^{t}RP	20		20		ns
^{t}WR (a)	1 CLK +7ns		1 CLK +5ns		–
^{t}WR (m)	15		15		ns

NOTE:

1. CAS latency indicated in parentheses.

Micron Technology, Inc., reserves the right to change products or specifications without notice.
©2001 Micron Technology, Inc. All rights reserved.

Figure 46: Write – With Auto Precharge[1]

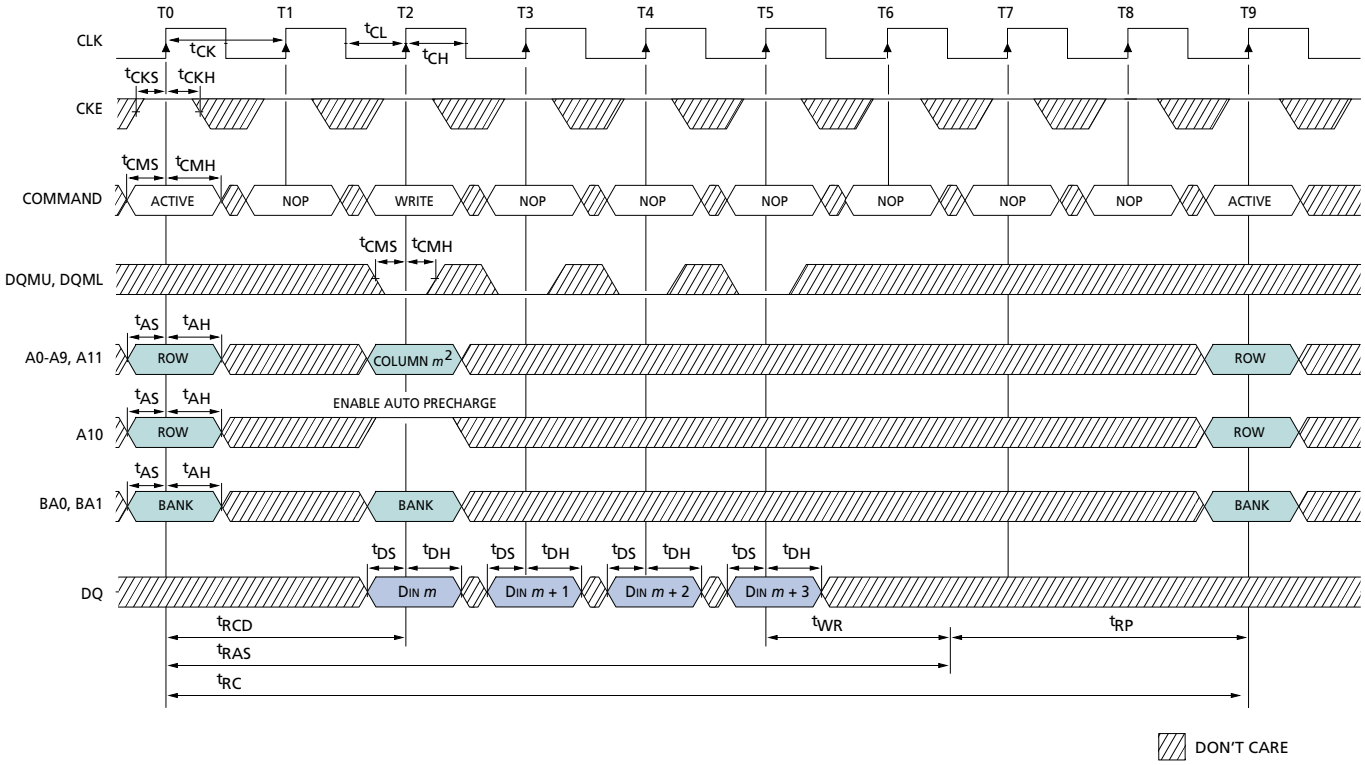

NOTE:
1. For this example, the burst length = 4.
2. x16: A9 and A11 = "Don't Care"
   x32: A8, A9,and A11 = "Don't Care"

SYMBOL[1]	-8 MIN	-8 MAX	-10 MIN	-10 MAX	UNITS
^{t}AC (3)		7		7	ns
^{t}AC (2)		8		8	ns
^{t}AC (1)		19		22	ns
^{t}AH	1		1		ns
^{t}AS	2.5		2.5		ns
^{t}CH	3		3		ns
^{t}CL	3		3		ns
^{t}CK (3)	8		10		ns
^{t}CK (2)	10		12		ns
^{t}CK (1)	20		25		ns
^{t}CKH	1		1		ns

SYMBOL	-8 MIN	-8 MAX	-10 MIN	-10 MAX	UNITS
^{t}CKS	2.5		2.5		ns
^{t}CMH	1		1		ns
^{t}CMS	2.5		2.5		ns
^{t}DH	1		1		ns
^{t}DS	2.5		2.5		ns
^{t}RAS	48	120,000	50	120,000	ns
^{t}RC	80		100		ns
^{t}RCD	20		20		ns
^{t}RP	20		20		ns
^{t}WR (a)	1 CLK +7ns		1 CLK +5ns		–
^{t}WR (m)	15		15		ns

NOTE:
1. CAS latency indicated in parentheses.

Micron Technology, Inc., reserves the right to change products or specifications without notice.
©2001 Micron Technology, Inc. All rights reserved.

Figure 47: Single Write – Without Auto Precharge[1]

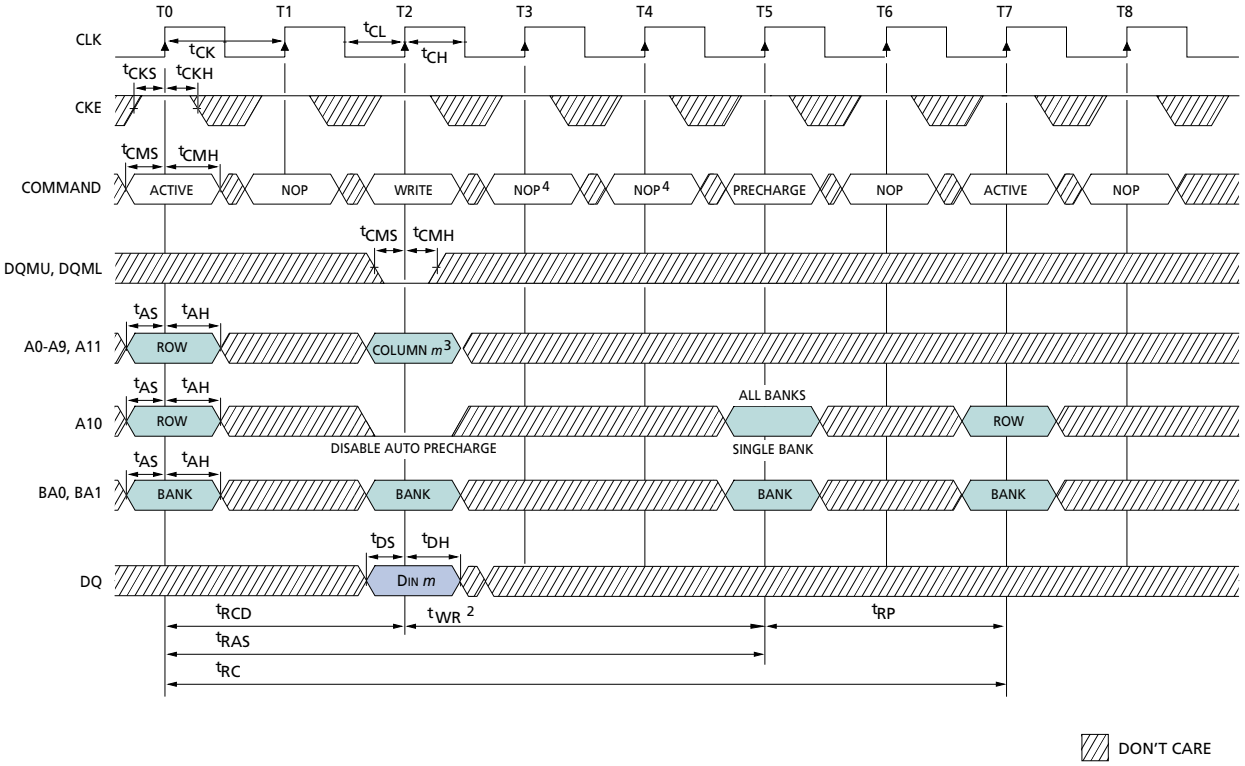

NOTE:

1. For this example, the burst length = 1, and the WRITE burst is followed by a "manual" PRECHARGE.
2. 15ns is required between <DIN m> and the PRECHARGE command, regardless of frequency.
3. x16:A9 and A11 = "Don't Care"
   x32:A8, A9,and A11 = "Don't Care"
4. PRECHARGE command not allowed else ^{t}RAS would be violated.

	-8		-10		
SYMBOL[1]	MIN	MAX	MIN	MAX	UNITS
^{t}AC (3)		7		7	ns
^{t}AC (2)		8		8	ns
^{t}AC (1)		19		22	ns
^{t}AH	1		1		ns
^{t}AS	2.5		2.5		ns
^{t}CH	3		3		ns
^{t}CL	3		3		ns
^{t}CK (3)	8		10		ns
^{t}CK (2)	10		12		ns
^{t}CK (1)	20		25		ns
^{t}CKH	1		1		ns

	-8		-10		
SYMBOL	MIN	MAX	MIN	MAX	UNITS
^{t}CKS	2.5		2.5		ns
^{t}CMH	1		1		ns
^{t}CMS	2.5		2.5		ns
^{t}DH	1		1		ns
^{t}DS	2.5		2.5		ns
^{t}RAS	48	120,000	50	120,000	ns
^{t}RC	80		100		ns
^{t}RCD	20		20		ns
^{t}RP	20		20		ns
^{t}WR (a)	1 CLK +7ns		1 CLK +5ns		–
^{t}WR (m)	15		15		ns

NOTE:

1. CAS latency indicated in parentheses.

Micron Technology, Inc., reserves the right to change products or specifications without notice.
©2001 Micron Technology, Inc. All rights reserved.

Figure 48: Single Write – With Auto Precharge[1]

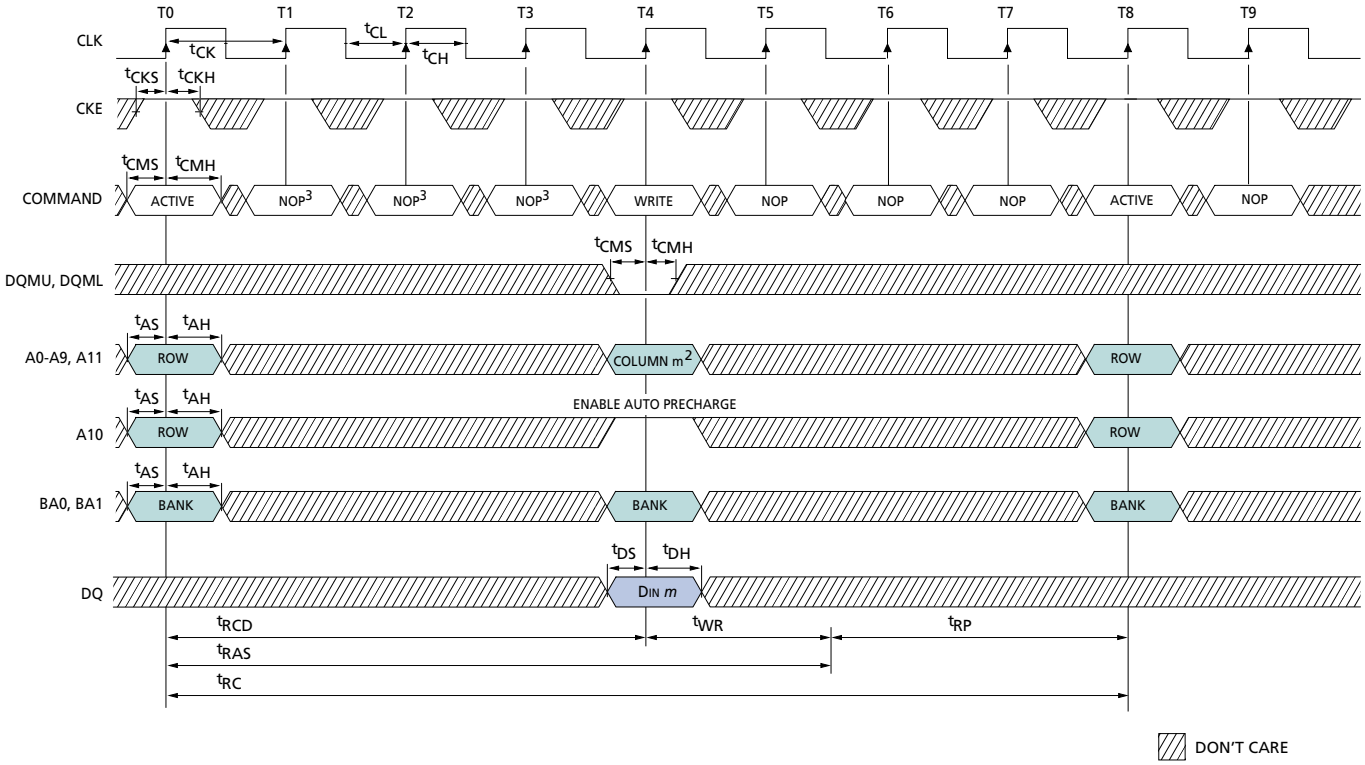

NOTE:

1. For this example, the burst length = 1, and the WRITE burst is followed by a "manual" PRECHARGE.
2. 15ns is required between <DIN m> and the PRECHARGE command, regardless of frequency.
3. x16:A9 and A11 = "Don't Care"
   x32:A8, A9,and A11 = "Don't Care"
4. WRITE command not allowed else ^{t}RAS would be violated.

	-8		-10		
SYMBOL[1]	MIN	MAX	MIN	MAX	UNITS
^{t}AC (3)		7		7	ns
^{t}AC (2)		8		8	ns
^{t}AC (1)		19		22	ns
^{t}AH	1		1		ns
^{t}AS	2.5		2.5		ns
^{t}CH	3		3		ns
^{t}CL	3		3		ns
^{t}CK (3)	8		10		ns
^{t}CK (2)	10		12		ns
^{t}CK (1)	20		25		ns
^{t}CKH	1		1		ns

	-8		-10		
SYMBOL	MIN	MAX	MIN	MAX	UNITS
^{t}CKS	2.5		2.5		ns
^{t}CMH	1		1		ns
^{t}CMS	2.5		2.5		ns
^{t}DH	1		1		ns
^{t}DS	2.5		2.5		ns
^{t}RAS	48	120,000	50	120,000	ns
^{t}RC	80		100		ns
^{t}RCD	20		20		ns
^{t}RP	20		20		ns
^{t}WR (a)	1 CLK +7ns		1 CLK +5ns		–
^{t}WR (m)	15		15		ns

NOTE:

1. CAS latency indicated in parentheses.

Micron Technology, Inc., reserves the right to change products or specifications without notice.
©2001 Micron Technology, Inc. All rights reserved.

Figure 49: Alternating Bank Write Accesses[1]

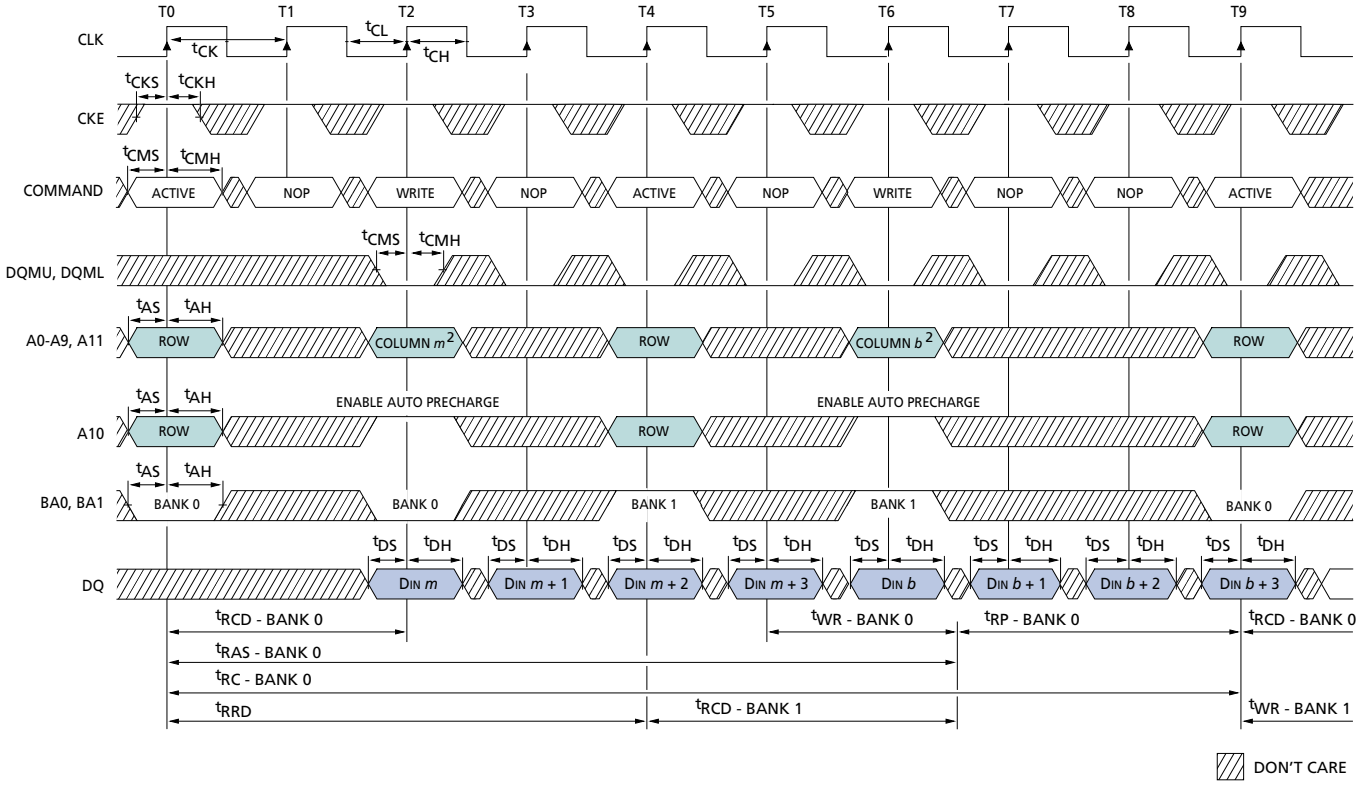

NOTE:

1. For this example, the burst length = 4.
2. x16: A9 and A11 = "Don't Care"
   x32: A8, A9,and A11 = "Don't Care"

	-8		-10		
SYMBOL[1]	MIN	MAX	MIN	MAX	UNITS
^{t}AC (3)		7		7	ns
^{t}AC (2)		8		8	ns
^{t}AC (1)		19		22	ns
^{t}AH	1		1		ns
^{t}AS	2.5		2.5		ns
^{t}CH	3		3		ns
^{t}CL	3		3		ns
^{t}CK (3)	8		10		ns
^{t}CK (2)	10		12		ns
^{t}CK (1)	20		25		ns
^{t}CKH	1		1		ns

	-8		-10		
SYMBOL	MIN	MAX	MIN	MAX	UNITS
^{t}CKS	2.5		2.5		ns
^{t}CMH	1		1		ns
^{t}CMS	2.5		2.5		ns
^{t}DH	1		1		ns
^{t}DS	2.5		2.5		ns
^{t}RAS	48	120,000	50	120,000	ns
^{t}RC	80		100		ns
^{t}RCD	20		20		ns
^{t}RP	20		20		ns
^{t}WR (a)	1 CLK +7ns		1 CLK +5ns		–
^{t}WR (m)	15		15		ns

NOTE:

1. CAS latency indicated in parentheses.

Micron Technology, Inc., reserves the right to change products or specifications without notice.
©2001 Micron Technology, Inc. All rights reserved.

Figure 50: Write – Full-page Burst[1]

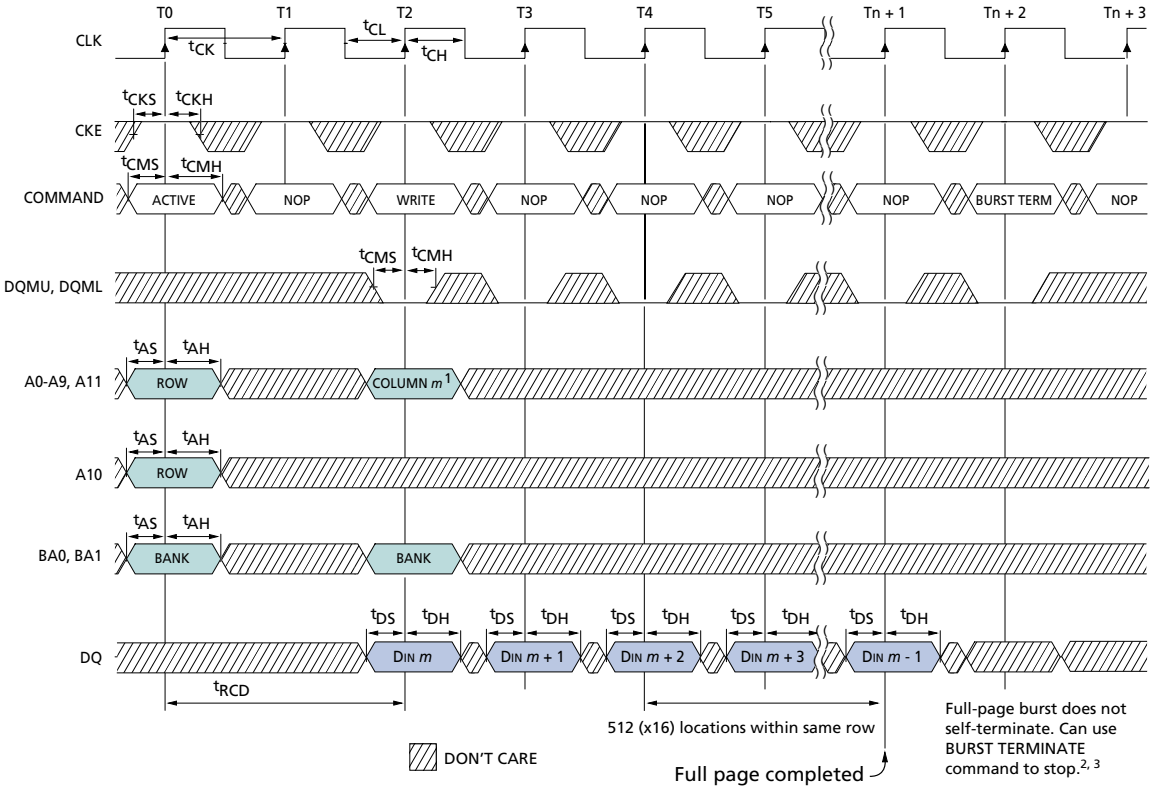

NOTE:

1. x16: A9 and A11 = "Don't Care"
   x32: A8, A9,and A11 = "Don't Care"
2. ^{t}WR must be satisfied prior to PRECHARGE command.
3. Page left open; no ^{t}RP.

SYMBOL[1]	-8 MIN	-8 MAX	-10 MIN	-10 MAX	UNITS
^{t}AC (3)		7		7	ns
^{t}AC (2)		8		8	ns
^{t}AC (1)		19		22	ns
^{t}AH	1		1		ns
^{t}AS	2.5		2.5		ns
^{t}CH	3		3		ns
^{t}CL	3		3		ns
^{t}CK (3)	8		10		ns
^{t}CK (2)	10		12		ns
^{t}CK (1)	20		25		ns
^{t}CKH	1		1		ns

SYMBOL	-8 MIN	-8 MAX	-10 MIN	-10 MAX	UNITS
^{t}CKS	2.5		2.5		ns
^{t}CMH	1		1		ns
^{t}CMS	2.5		2.5		ns
^{t}DH	1		1		ns
^{t}DS	2.5		2.5		ns
^{t}RAS	48	120,000	50	120,000	ns
^{t}RC	80		100		ns
^{t}RCD	20		20		ns
^{t}RP	20		20		ns
^{t}WR (a)	1 CLK +7ns		1 CLK +5ns		–
^{t}WR (m)	15		15		ns

NOTE:

1. CAS latency indicated in parentheses.

Micron Technology, Inc., reserves the right to change products or specifications without notice.
©2001 Micron Technology, Inc. All rights reserved.

Figure 51: Write – DQM Operation[1]

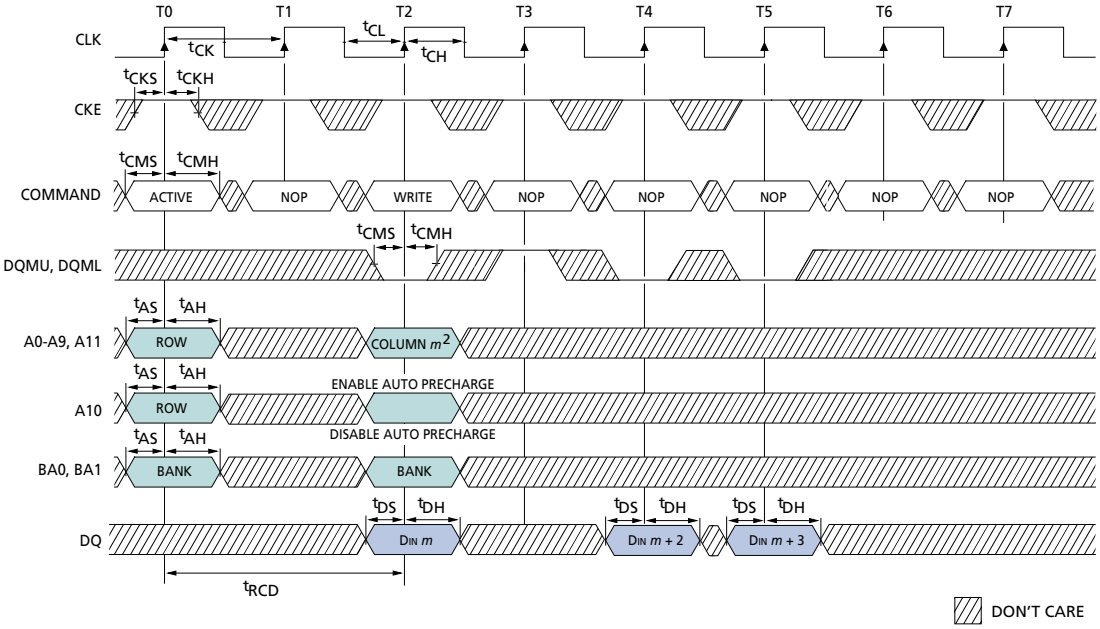

NOTE:

1. For this example, the burst length = 4.
2. x16: A9 and A11 = "Don't Care"
   x32: A8, A9,and A11 = "Don't Care."

SYMBOL[1]	-8 MIN	-8 MAX	-10 MIN	-10 MAX	UNITS
^{t}AC (3)		7		7	ns
^{t}AC (2)		8		8	ns
^{t}AC (1)		19		22	ns
^{t}AH	1		1		ns
^{t}AS	2.5		2.5		ns
^{t}CH	3		3		ns
^{t}CL	3		3		ns
^{t}CK (3)	8		10		ns
^{t}CK (2)	10		12		ns
^{t}CK (1)	20		25		ns
^{t}CKH	1		1		ns

SYMBOL	-8 MIN	-8 MAX	-10 MIN	-10 MAX	UNITS
^{t}CKS	2.5		2.5		ns
^{t}CMH	1		1		ns
^{t}CMS	2.5		2.5		ns
^{t}DH	1		1		ns
^{t}DS	2.5		2.5		ns
^{t}RAS	48	120,000	50	120,000	ns
^{t}RC	80		100		ns
^{t}RCD	20		20		ns
^{t}RP	20		20		ns
^{t}WR (a)	1 CLK +7ns		1 CLK +5ns		–
^{t}WR (m)	15		15		ns

NOTE:

1. CAS latency indicated in parentheses.

Micron Technology, Inc., reserves the right to change products or specifications without notice.
©2001 Micron Technology, Inc. All rights reserved.

Figure 52: 54-Ball FBGA (8mm x 9mm)

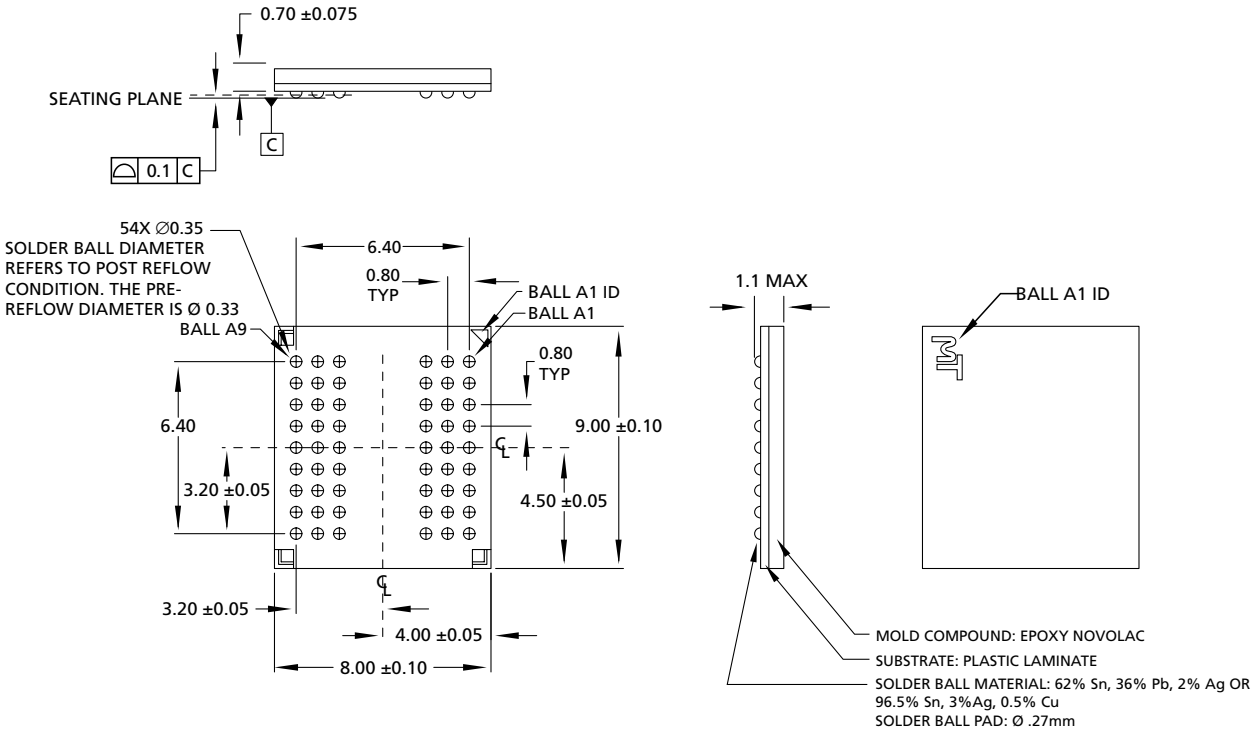

NOTE:

1. All dimensions in millimeters.

Micron Technology, Inc., reserves the right to change products or specifications without notice.
©2001 Micron Technology, Inc. All rights reserved.

Figure 53: 54-Ball VFBGA (8mm x 8mm)

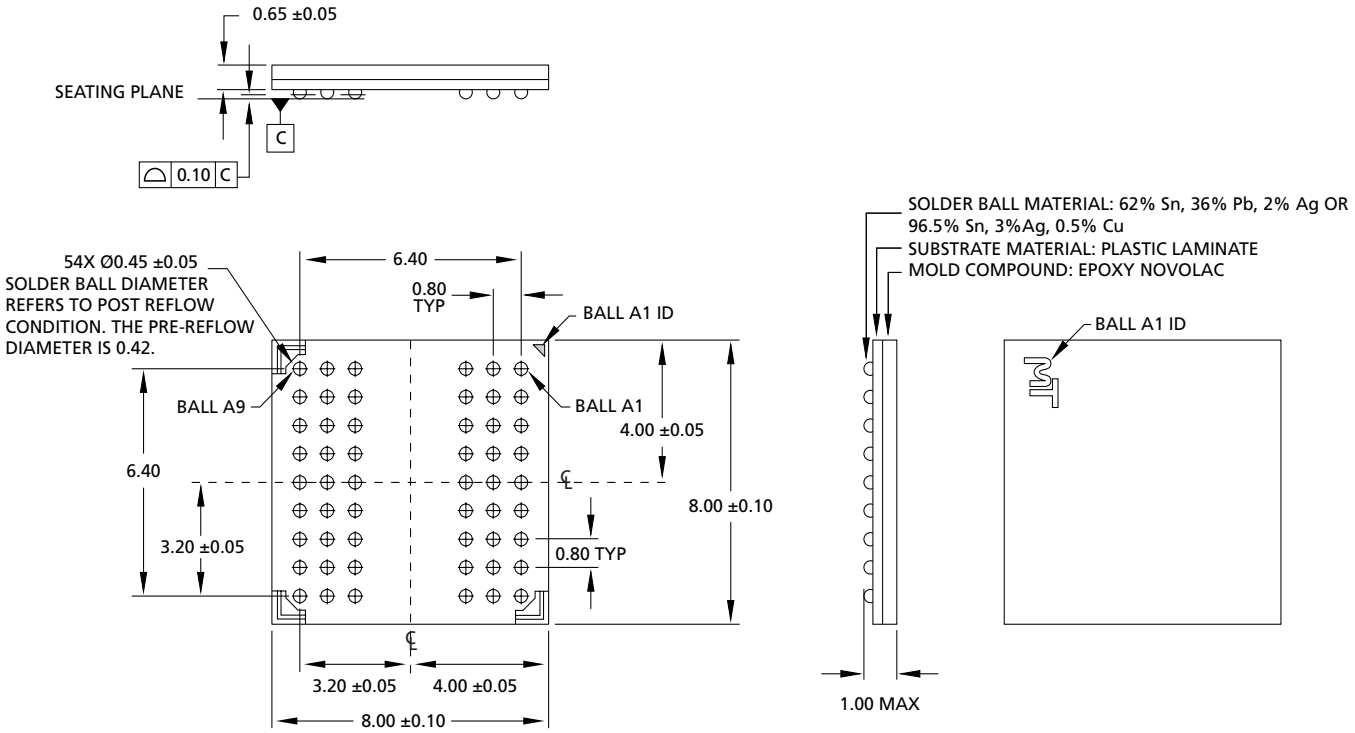

NOTE:

1. All dimensions in millimeters.

Micron Technology, Inc., reserves the right to change products or specifications without notice.
©2001 Micron Technology, Inc. All rights reserved.

Figure 54: 90-Ball FBGA (11mm x 13mm)

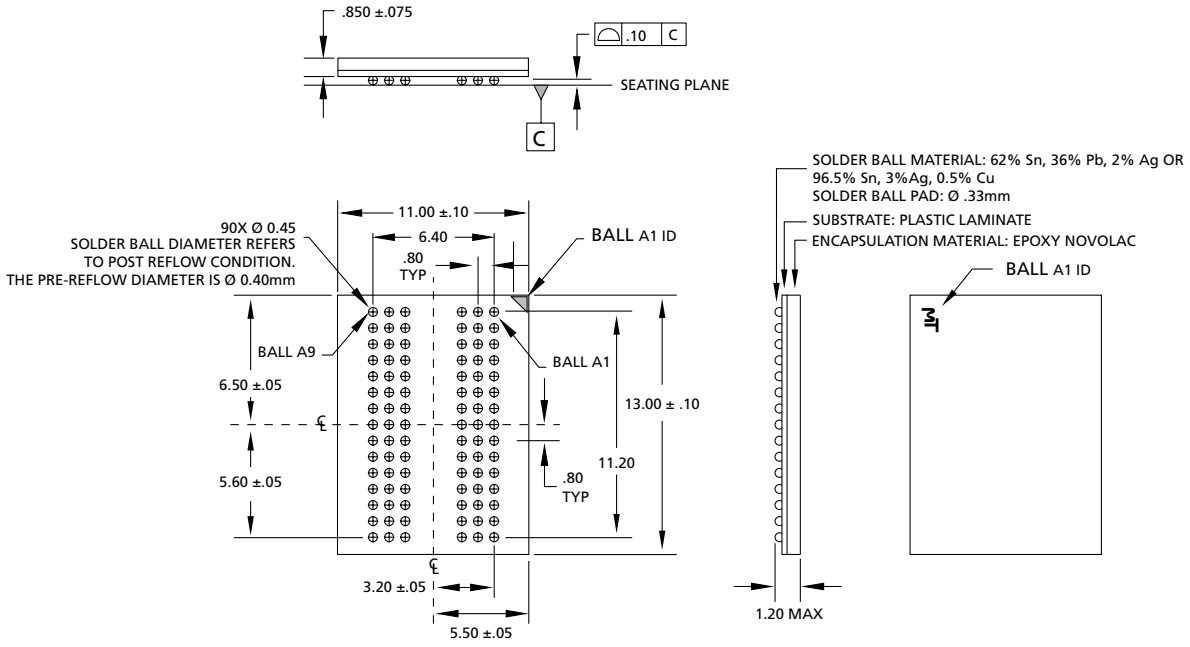

NOTE:

1. All dimensions in millimeters.
2. Recommended pad size for PCB is 0.33mm±0.025mm.

Micron Technology, Inc., reserves the right to change products or specifications without notice.
©2001 Micron Technology, Inc. All rights reserved.

Figure 55: 90-Ball VFBGA (8mm x 13mm)

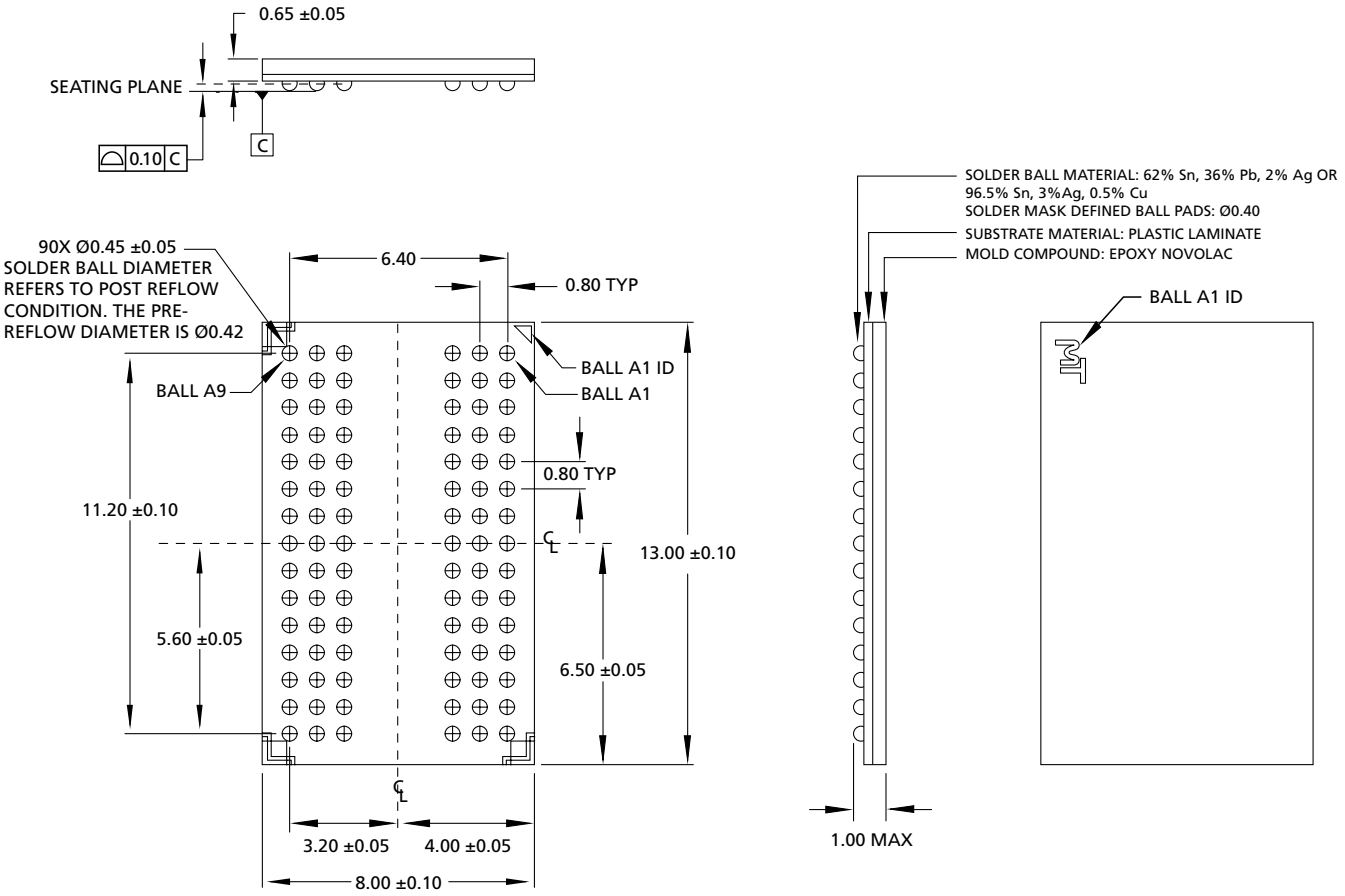

NOTE:

1. All dimensions in millimeters.
2. Recommended pad size for PCB is 0.4mm±0.025mm.

8000 S. Federal Way, P.O. Box 6, Boise, ID 83707-0006, Tel: 208-368-3900
E-mail: prodmktg@micron.com, Internet: http://www.micron.com, Customer Comment Line: 800-932-4992
Micron, the M logo, and the Micron logo are trademarks and/or service marks of Micron Technology, Inc.
All other trademarks are the property of their respective owners.

Micron Technology, Inc., reserves the right to change products or specifications without notice.
©2001 Micron Technology, Inc. All rights reserved.