GS/*DURAPULSE* Accessories – Braking Resistors

Overview

Braking resistors are used to increase the control torque of the AC drive, for frequently repeated ON-OFF cycles of the AC drive, or for decelerating a load with large inertia.

For DURAPULSE drive models 20 HP and above, a dynamic braking unit must be used in conjunction with the braking resistor, as shown in the DURAPULSE AC drive Braking Units table.

For additional information, please refer to the dynamic braking manual, GS3-DB-M.

GS-25P0-BR

GS-27P5-BR

GS-2020-BR-ENC

GS-2020-BR-ENC without Cover

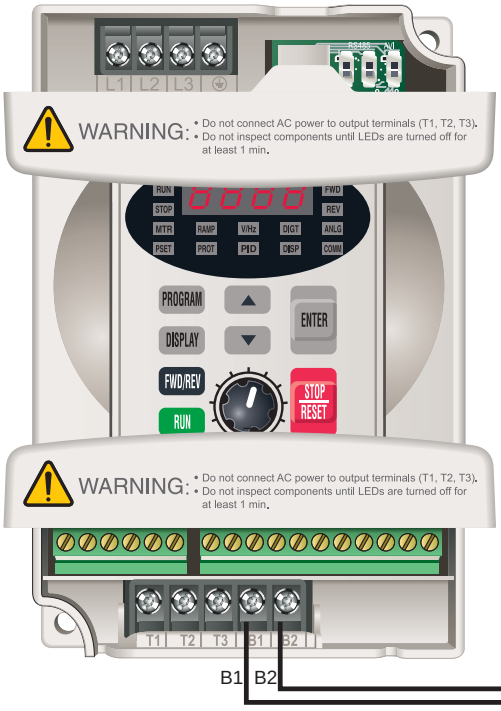

GS2 braking resistor connection;

Refer to user manuals GS3-M and GS3-DB-M for *DURAPULSE* resistor connection information.

GS/*DURAPULSE* Accessories – Braking Resistors

Dynamic Braking Resistors								
Part Number	**Quantity Required and Wiring**	**Price Each**	**Drive Model**	**Motor V / hp**	**Braking Torque ED 10%**	**Resistance (Ω)**	**Power (W)**	**Duty Cycle**
GS-20P5-BR	1	<--->	GS2-10P2 GS2-10P5 GS2-20P5	115 / 0.25 115 / 0.5 230 / 0.5	270%	200Ω	80	10%
GS-21P0-BR	1	<--->	GS2-11P0 GS2/3-21P0	115 / 1 230 / 1	125%	200Ω	80	10%
GS-22P0-BR	1	<--->	GS2/3-22P0	230 / 2	125%	100Ω	300	10%
GS-23P0-BR	1	<--->	GS2/3-23P0	230 / 3	125%	70Ω	300	10%
GS-25P0-BR *	1	<--->	GS2/3-25P0	230 / 5	125%	40Ω	400	10%
GS-27P5-BR	1	<--->	GS2/3-27P5	230 / 7.5	125%	30Ω	500	10%
GS-2010-BR-ENC	1	<--->	GS3-2010	230 / 10	125%	20Ω	1000	10%
GS-2015-BR-ENC	1	<--->	GS3-2015	230 / 15	125%	13.6Ω	2400	10%
GS-2020-BR-ENC	1	<--->	GS3-2020	230 / 20	125%	10Ω	3000	10%
GS-2025-BR-ENC	1	<--->	GS3-2025	230 / 25	125%	8Ω	4800	10%
GS-2030-BR-ENC	1	<--->	GS3-2030	230 / 30	125%	6.8Ω	4800	10%
GS-2040-BR-ENC	2 (also 2 DBU)	<--->	GS3-2040	230 / 40	125%	10Ω x 2	3000 x 2	10%
GS-2050-BR-ENC	2 (also 2 DBU)	<--->	GS3-2050	230 / 50	125%	8Ω x 2	4800 x 2	10%
GS-41P0-BR	1	<--->	GS2/3-41P0	460 / 1	125%	750Ω	80	10%
GS-42P0-BR	1	<--->	GS2/3-42P0 GS2-51P0 GS2-52P0	460 / 2 575 / 1 575 / 2	125%	400Ω	300	10%
	2 / parallel		GS2-53P0 GS2-55P0 GS2-57P5	575 / 3 575 / 5 575 / 7.5				
GS-43P0-BR	1	<--->	GS2/3-43P0	460 / 3	125%	250Ω	300	10%
GS-45P0-BR	1	<--->	GS2/3-45P0	460 / 5	125%	150Ω	400	10%
GS-47P5-BR	1	<--->	GS2/3-47P5	460 / 7.5	125%	100Ω	500	10%
GS-4010-BR	1	<--->	GS2/3-4010	460 / 10	125%	75Ω	1000	10%
	2 / series		GS2-5010	575 / 10				
GS-4015-BR-ENC	1	<--->	GS3-4015	460 / 15	125%	50Ω	1000	10%
GS-4020-BR-ENC	1	<--->	GS3-4020	460 / 20	125%	40Ω	1500	10%
GS-4025-BR-ENC	1	<--->	GS3-4025	460 / 25	125%	32Ω	4800	10%
GS-4030-BR-ENC	1	<--->	GS3-4030	460 / 30	125%	27.2Ω	4800	10%
GS-4040-BR-ENC	1	<--->	GS3-4040	460 / 40	125%	20Ω	6000	10%
GS-4050-BR-ENC	1	<--->	GS3-4050	460 / 50	125%	16Ω	9600	10%
GS-4060-BR-ENC	1	<--->	GS3-4060	460 / 60	125%	13.6Ω	9600	10%
GS-4075-BR-ENC	2 (also 2 DBU)	<--->	GS3-4075	460 / 75	125%	20Ω x 2	6000 x 2	10%
GS-4100-BR-ENC	2 (also 2 DBU)	<--->	GS3-4100	460 / 100	125%	13.6Ω x 2	9600 x 2	10%

NOTE: Dynamic braking resistors not available for GS1 series AC drives.

NOTE: The use of dynamic braking resistors with GS2 series AC drives requires no parameter setup. The AC drive will automatically sense the presence of a braking resistor.

NOTE: For DURAPULSE GS3 series AC drives 20 hp and above, dynamic braking units must be used in conjunction with braking resistors.

**** GS-25P0-BR can be also be used with SureServo AC Servo Drive # SVA-2040.***

GS/DURAPULSE Accessories – Braking Resistors

Dimensions

Braking Resistors Dimensions								
Part Number	**Enclosure**	**Figure**	**Weight (g)**	**L1 (mm)**	**L2 (mm)**	**H (mm)**	**D (mm)**	**W (mm)**
GS-20P5-BR	none	1	160	140	125	20	5.3	40
GS-21P0-BR			160	140	125	20	5.3	60
GS-22P0-BR			750	215	200	30	5.3	60
GS-23P0-BR			750	215	200	30	5.3	60
GS-25P0-BR			930	265	250	30	5.3	60
GS-27P5-BR		2	1100	335	320	30	53	60
GS-2010-BR-ENC *	GCE3	3	dimensions shown in diagram					
GS-2015-BR-ENC	GCE6	4						
GS-2020-BR-ENC								
GS-2025-BR-ENC	GCE9	5						
GS-2030-BR-ENC								
GS-2040-BR-ENC	GCE6	4						
GS-2050-BR-ENC	GCE9	5						
GS-41P0-BR	none	1	160	140	125	20	5.3	60
GS-42P0-BR			750	215	200	30	5.3	60
GS-43P0-BR			750	215	200	30	5.3	60
GS-45P0-BR			930	265	250	30	5.3	60
GS-47P5-BR		2	1100	335	320	30	5.3	60
GS-4010-BR			2800	400	385	50	5.3	100
GS-4015-BR-ENC	GCE3	3	dimensions shown in diagram					
GS-4020-BR-ENC	GCE4	6						
GS-4025-BR-ENC	GCE12	7						
GS-4030-BR-ENC								
GS-4040-BR-ENC								
GS-4050-BR-ENC	GCE15	8						
GS-4060-BR-ENC								
GS-4075-BR-ENC	GCE12	7						
GS-4100-BR-ENC	GCE15	8						

Note: For DURAPULSE drive models 20HP and above, a dynamic braking unit must be used in conjunction with the braking resistor, as shown in the Braking Units and Braking Resistors tables. For additional information, refer to the dynamic braking manual, GS3-DB-M.

**** GS-2010-BR-ENC can be also be used with SureServo AC Servo Drive #s SVA-2100 & SVA-2300.***

GS/*DURAPULSE* Accessories – Braking Resistors

Figure 1

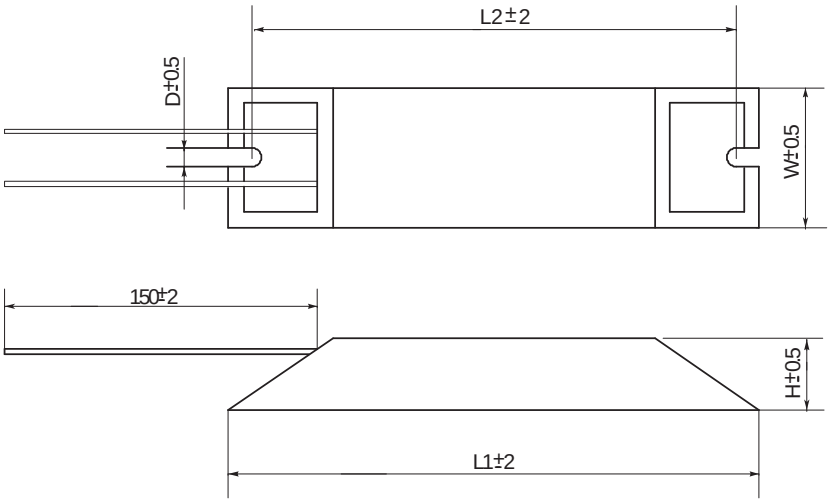

Figure 2

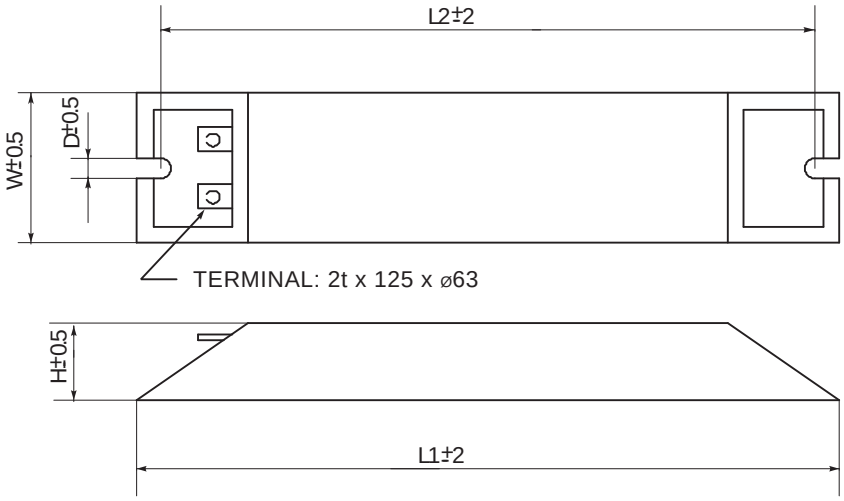

Figure 3

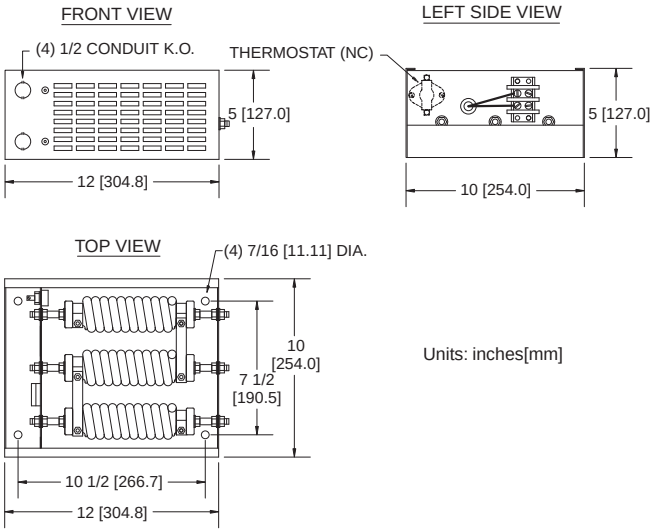

Figure 4

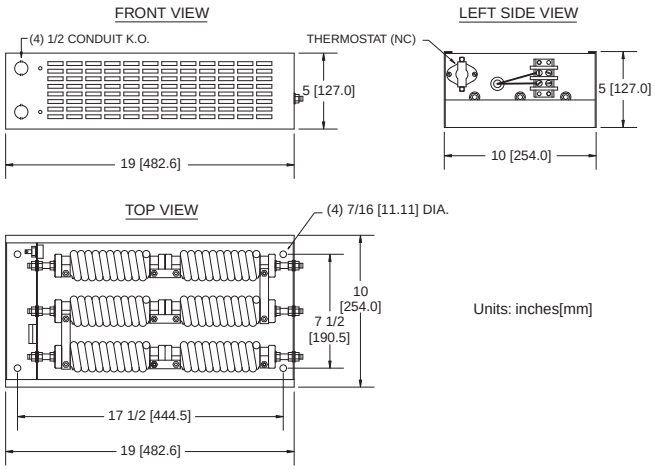

GS/*DURAPULSE* Accessories – Braking Resistors

Figure 5

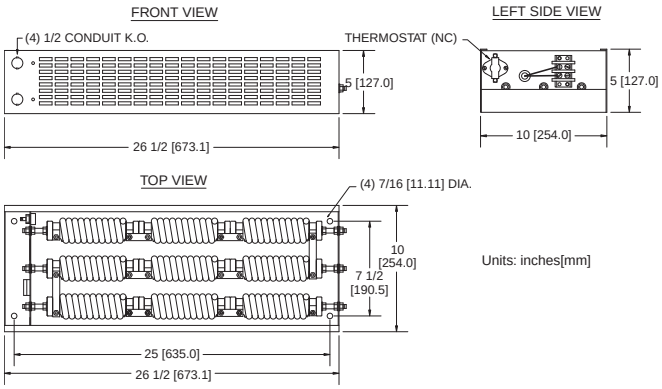

Figure 6

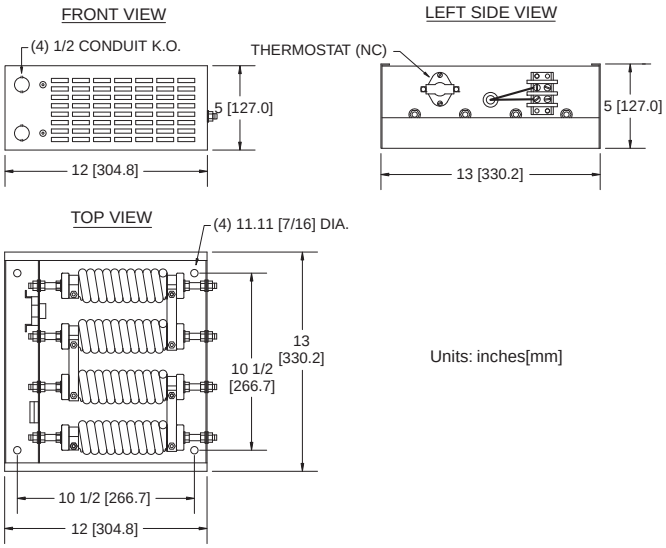

Figure 7

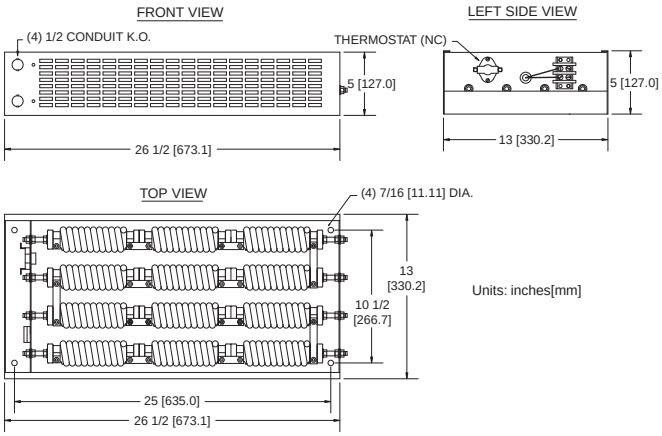

Figure 8

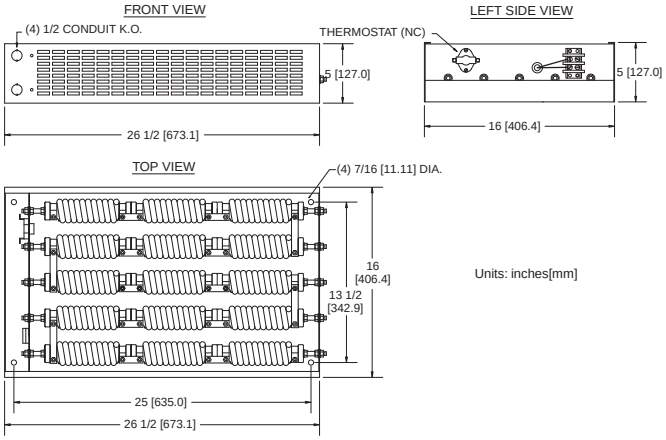

GS/*DURAPULSE* Accessories – Overview

Accessories – Part numbering system

Note: With the exception of the EMI filters, RF filters, and LR series line reactors, each accessory part number begins with GS, followed by the AC Drive rating, and then the relevant accessory code. Following the accessory code, you will find a description code when applicable. The diagram at right shows the accessory part numbering system.

GS - 22P0 - LR - 3PH

Description Code (optional)
1PH: Single phase **3PH**: Three phase **ENC**: Enclosure **Blank**: For reactor, blank = 3-phase

Accessory Code
BR: Braking resistor **BZL**: Bezel **CBL**: Cable **DBU**: Dynamic Brake Unit
EDRV: Ethernet board **FB**: Feedback board **FKIT**: Fuse Kit **FUSE**: Replacement fuses for FKIT
KPD: Keypad **LR**: Line reactor (legacy) **RS**: Recommended Standard

Horsepower Rating
Example: **2P0** = 2.0 hp **7P5** = 7.5 hp **010** = 10 hp

Voltage Rating
1: 115V **2**: 230V **4**: 460V **5**: 575V

Series
GS: All GS and DURApulse Series Drives
GS1: GS1 Series **GS2**: GS2 Series **GS3**: DURApulse Series **LR**: Newer line reactor series

Under 20hp

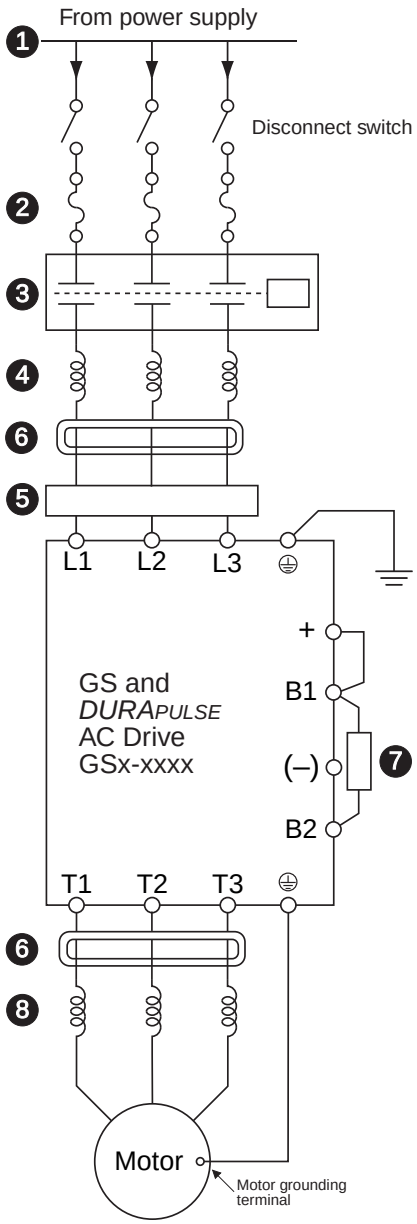

❶ Power Supply

Please follow the specific power supply requirements shown in Chapter 1 and the Warning section of the applicable GS or *DURAPULSE* AC Drives User Manual.

❷ Fuses (Refer to page 13–81.)

Input fuses protect the AC drive from excessive input current due to line surges, short circuits, and ground faults. They are recommended for all installations and may be required for UL-listed installations. *(AutomationDirect fuses are not available for GS1 drives.)*

❸ Contactor (Optional) (Refer to the Motor Controls section.)

Do not use a contactor or disconnect switch for run/stop control of the AC drive and motor. This will reduce the operating life cycle of the AC drive. Cycling a power circuit switching device while the AC drive is in run mode should be done only in emergency situations.

❹ Input Line Reactor (Optional) (Refer to page 13–50.)

Input line reactors protect the AC drive from transient overvoltage conditions, typically caused by utility capacitor switching. The input line reactor also reduces the harmonics associated with AC drives. Input line reactors are recommended for all installations.

❺ EMI filter (Optional) (Refer to page 13–74.)

Input EMI filters reduce electromagnetic interference or noise on the input side of the AC drive. They are required for CE compliance and recommended for installations prone to or sensitive to electromagnetic interference. *(Separate EMI filters are not neccessary for GS1 drives.)*

❻ RF filter (Optional) (Refer to page 13–80.)

RF filters reduce the radio frequency interference or noise on the input or output side of the inverter.

❼ Braking Resistor (Optional) (Refer to page 13–69.)

Dynamic braking allows the AC drive to produce additional braking (stopping) torque. AC drives can typically produce between 15% & 20% braking torque without the addition of any external components. The addition of optional braking may be required for applications that require rapid deceleration or high inertia loads. *(Braking resistors are not available for GS1 drives.)*

❽ Output Line Reactor (Optional) (Refer to page 13–50.)

Output line reactors protect the motor insulation against AC drive short circuits and IGBT reflective wave damage, and also "smooth" the motor current waveform, allowing the motor to run cooler. They are **recommended for operating "non-inverter-duty" motors** and when the **length of wiring between the AC drive and motor exceeds 75 feet**.

GS/*DURAPULSE* Accessories – Overview

20hp & Over
(*DURAPULSE* only)

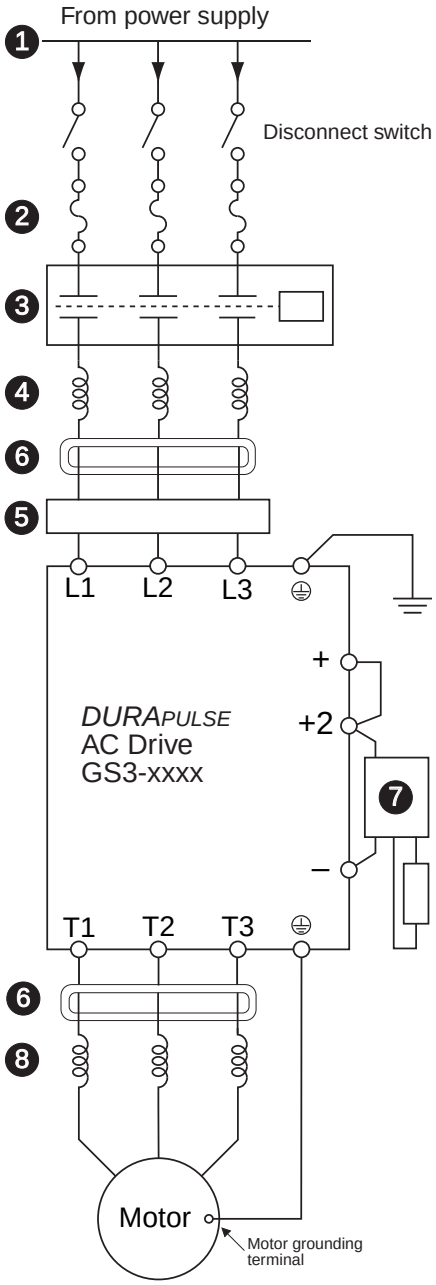

❶ Power Supply

Please follow the specific power supply requirements shown in Chapter 1 of the *DURAPULSE* AC Drives User Manual.

❷ Fuses (Refer to page 13–81.)

Input fuses protect the AC drive from excessive input current due to line surges, short circuits, and ground faults. They are recommended for all installations and may be required for UL-listed installations.

❸ Contactor (Optional) (Refer to the Motor Controls section.)

Do not use a contactor or disconnect switch for run/stop control of the AC drive and motor. This will reduce the operating life cycle of the AC drive. Cycling a power circuit switching device while the AC drive is in run mode should be done only in emergency situations.

❹ Input Line Reactor (Optional) (Refer to page 13–50.)

Input line reactors protect the AC drive from transient overvoltage conditions, typically caused by utility capacitor switching. The input line reactor also reduces the harmonics associated with AC drives. Input line reactors are recommended for all installations.

❺ EMI filter (Optional) (Refer to page 13–74.)

Input EMI filters reduce electromagnetic interference or noise on the input side of the AC drive. They are required for CE compliance and recommended for installations prone to or sensitive to electromagnetic interference.

❻ RF filter (Optional) (Refer to page 13–80.)

RF filters reduce the radio frequency interference or noise on the input or output side of the inverter.

❼ Braking Unit & Braking Resistor (Optional) (pg 13–67)

Dynamic braking allows the AC drive to produce additional braking (stopping) torque. AC drives can typically produce between 15% & 20% braking torque without the addition of any external components. The addition of optional braking may be required for applications that require rapid deceleration or high inertia loads.

❽ Output Line Reactor (Optional) (Refer to page 13–50.)

Output line reactors protect the motor insulation against AC drive short circuits and IGBT reflective wave damage, and also "smooth" the motor current waveform, allowing the motor to run cooler. They are **recommended for operating "non-inverter-duty" motors** and when the **length of wiring between the AC drive and motor exceeds 75 feet**.