2SK3800

N-channel MOSFET

Features and Benefits

- RDSON: 6mΩ (max.)@25℃
- VDSS: 40V
- Built-in Protection zener Di between G-S.
- Avalanche energy capability guaranteed
- Trench MOSFET structure.
- High Reliability

Applications

Various motor driving applications, such as power steering motors.
Replacement of mechanical relays.
High current switching.
For automotive

Package

D2PAK

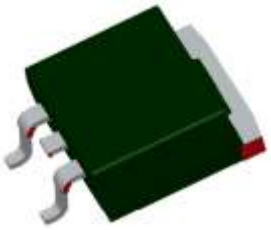

Equivalent Circuit

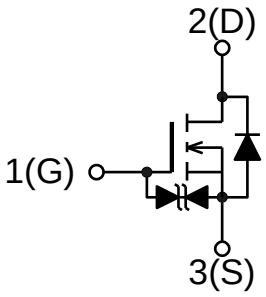

Absolute maximum ratings

(Ta=25°C)

Characteristic	*Symbol*	*Rating*	*Unit*
Drain to Source Voltage	V_{DSS}	40	V
Gate to Source Voltage	V_{GSS}	±20	V
Continuous Drain Current	I_D	±70	A
Pulsed Drain Current	$I_{D(pulse)}$ *1	±140	A
Maximum Power Dissipation	P_D	80 (Tc=25°C)	W
Single Pulse Avalanche Energy	E_{AS} *2	400	mJ
Channel Temperature	T_{ch}	150	°C
Storage Temperature	T_{stg}	-55 to +150	°C

*1: PW≤100us, duty cycle≤1%
*2: V_{DD}=20V, L=1mH, I_L=20A, unclamped, R_G=50Ω (See Fig. 1)

Electric Characteristics

(Ta=25°C)

Characteristic	Symbol	Test Condition	Rating			Unit
			MIN	TYP	MAX	
Drain to Source Breakdown Voltage	$V_{(BR)DSS}$	I_D=100uA, V_{GS}=0V	40			V
Gate to Source Leakage Current	I_{GSS}	V_{GS}=±15V			±10	uA
Drain to Source Leakage Current	I_{DSS}	V_{DS}=40V, V_{GS}=0V			100	uA
Gate Threshold Voltage	V_{TH}	V_{DS}=10V, I_D=1mA	2.0	3.0	4.0	V
Forward Trance Conductance	$R_{e(yfs)}$	V_{DS}=10V, I_D=35A	30	50		S
Static Drain to Source On-resistance	$R_{DS(ON)}$	I_D=35A, V_{GS}=10V		5.0	6.0	mΩ
Input Capacitance	C_{iss}	V_{DS}=10V, V_{GS}=0V, f=1MHz		5100		pF
Output Capacitance	C_{oss}			1200		
Reverse Transfer Capacitance	C_{rss}			860		
Turn-on Delay Time	$t_{d(on)}$	I_D=35A, V_{DD}≒20V, R_G=22Ω, R_L=0.57Ω, V_{GS}=10V See Fig.2		100		ns
Rise Time	t_r			100		
Turn-off Delay Time	$t_{d(off)}$			300		
Fall Time	t_f			130		
Source-Drain Diode Forward Voltage	V_{SD}	I_{SD}=50A, V_{GS}=0V		0.9	1.2	V
Source-Drain Diode Reverse Recovery Time	t_{rr}	I_{SD}=25A, di/dt=50A/us		100		ns
Thermal Resistance between Junction and Case	$R_{th(ch-c)}$				1.56	°C/W
Thermal Resistance between Junction and Ambient	$R_{th(ch-a)}$				62.5	°C/W

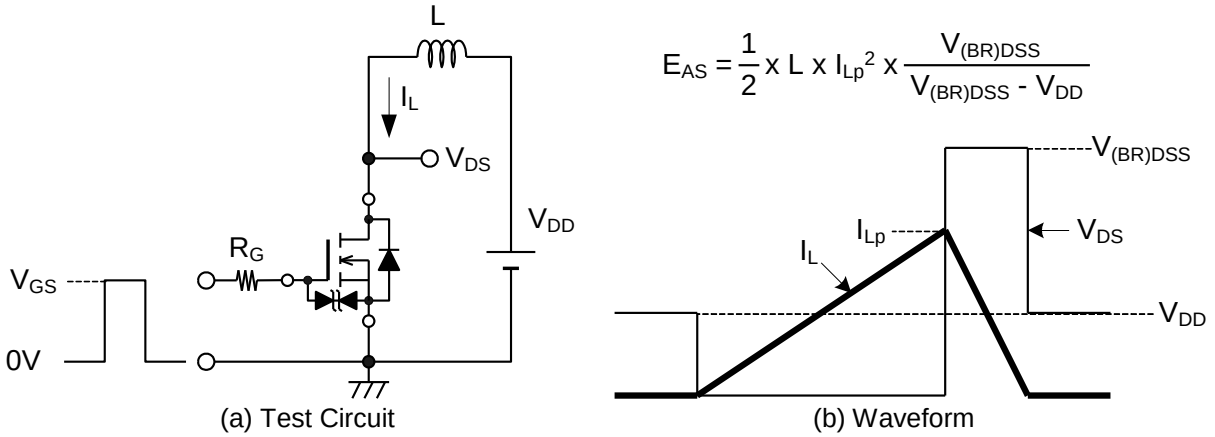

(a) Test Circuit (b) Waveform

Fig.1 Unclamped Inductive Test Method

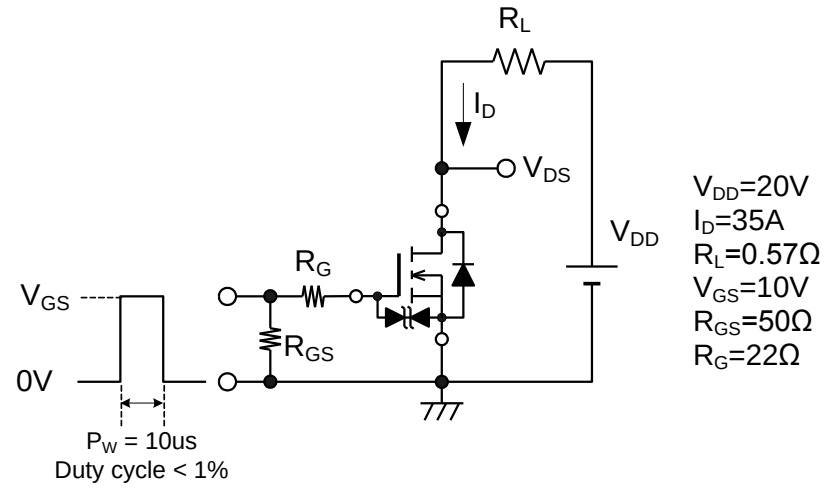

(a) Test Circuit

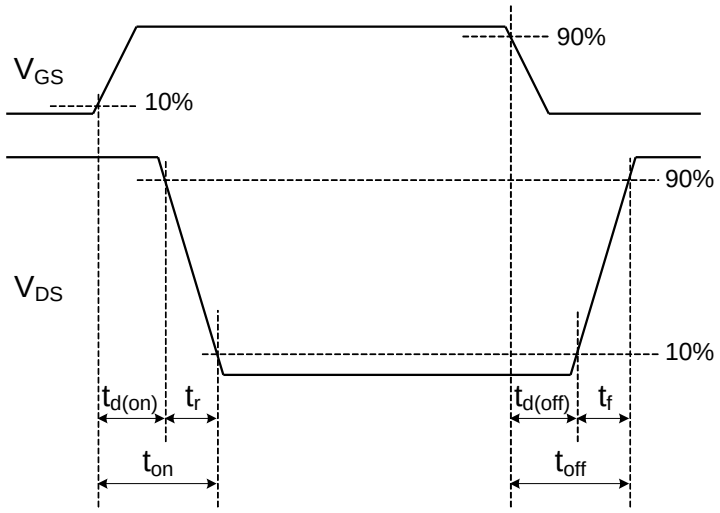

(b) Waveform

Fig.2 Switching Time Test Method

Characteristic Curves

■ I_D—V_{DS} Characteristics (typ.)

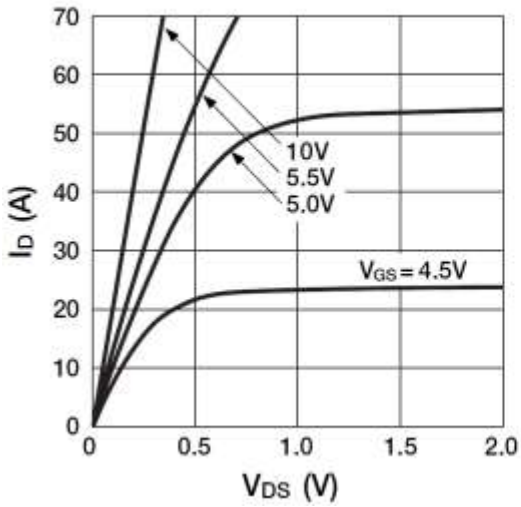

■ I_D—V_{GS} Characteristics (typ.)

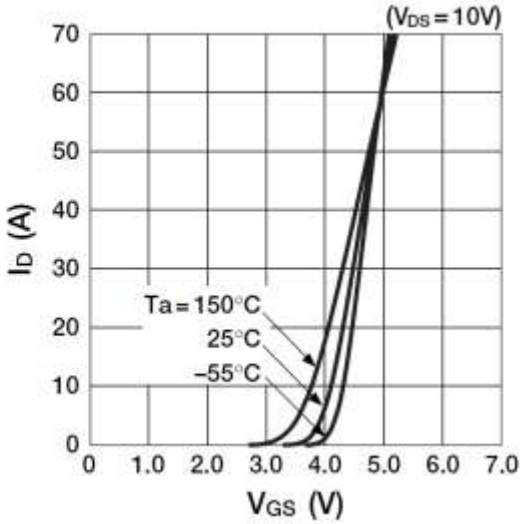

■ V_{DS}—V_{GS} Characteristics (typ.)

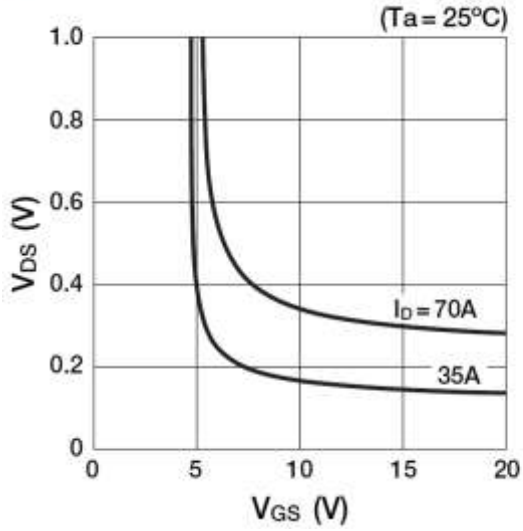

■ Re (yfs) —I_D Characteristics (typ.)

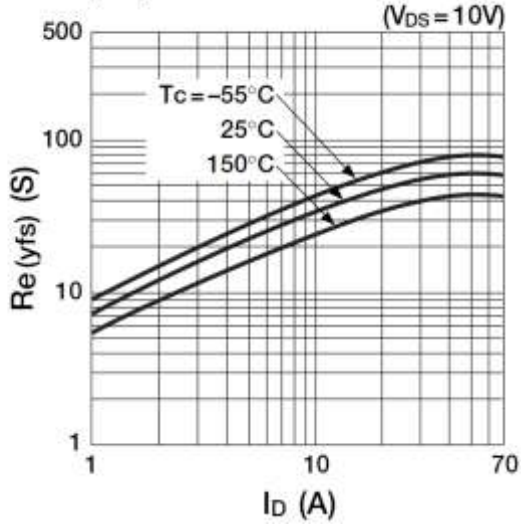

■ $R_{DS\,(ON)}$ —I_D Characteristics (typ.)

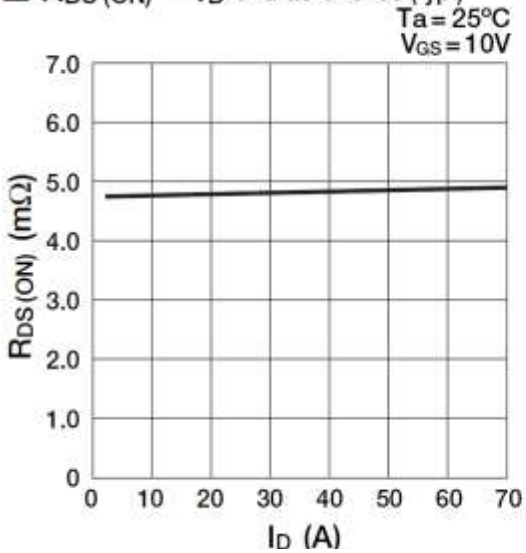

■ $R_{DS\,(ON)}$ —T_C Characteristics (typ.)

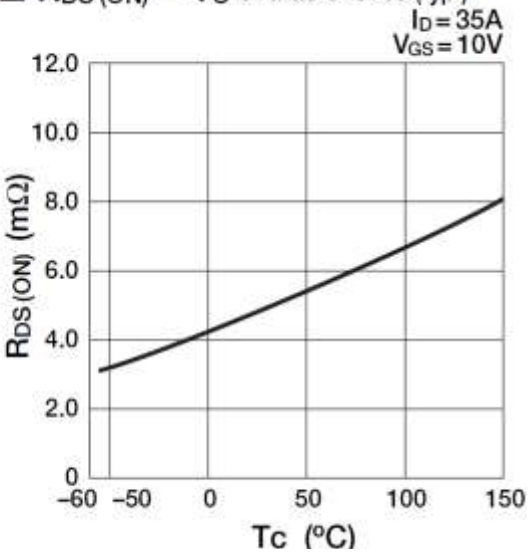

Characteristic Curves

■ θj-c — t Characteristics (Single pulse)

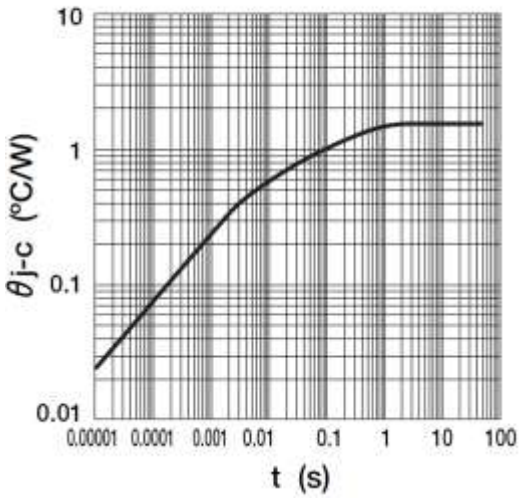

■ Dynamic I/O Characteristics (typ.)

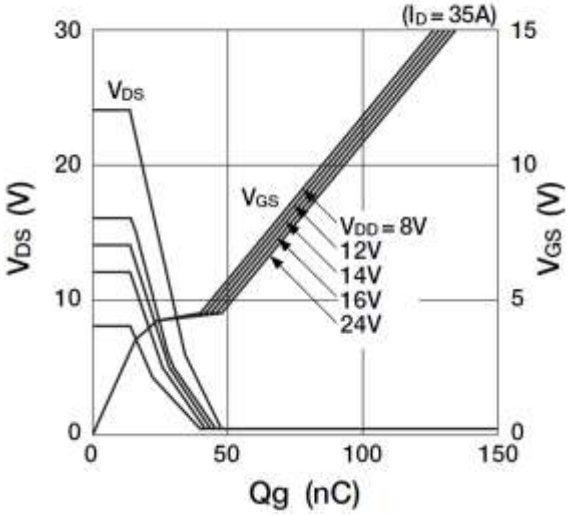

■ Capacitance — VDS Characteristics (typ.)

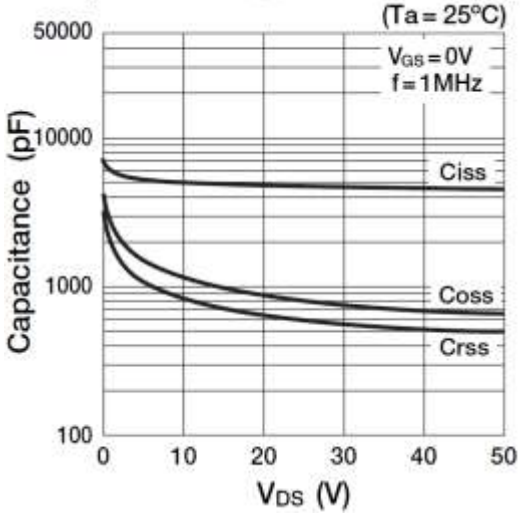

■ IDR — VSD Characteristics (typ.)

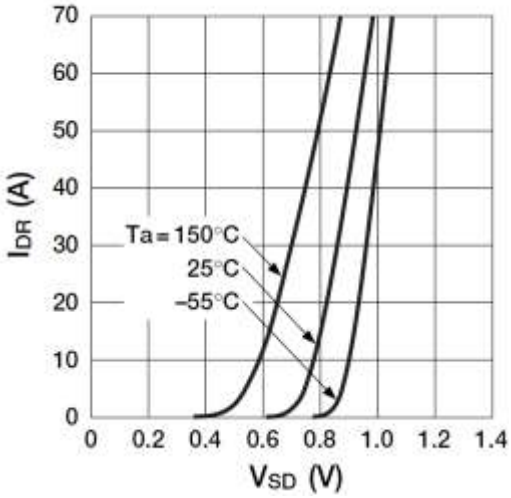

■ Safe Operating Area (single pulse)

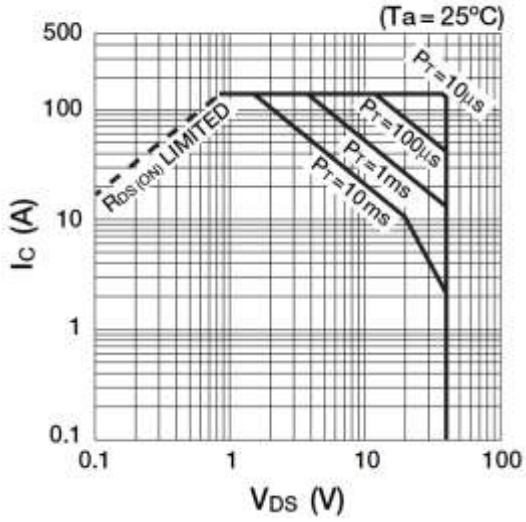

■ PD — TC Characteristics

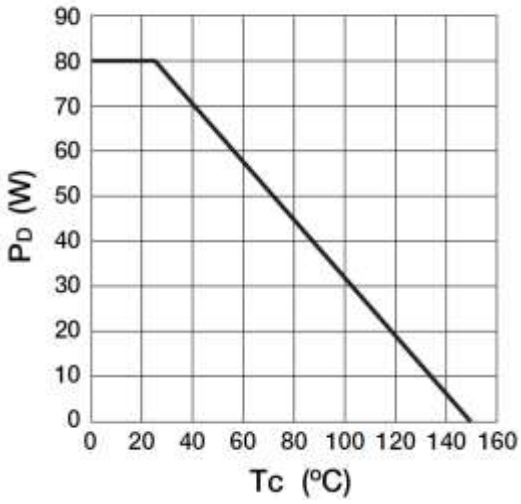

Outline (unit: mm)

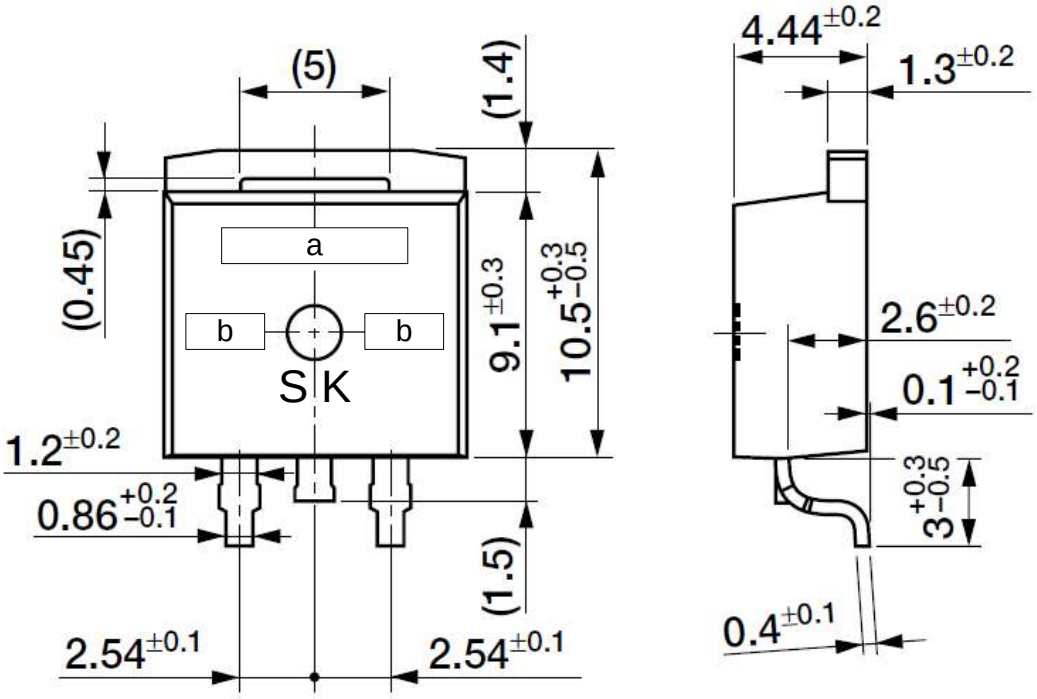

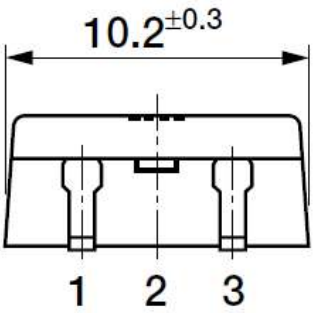

1 Gate
2 Drain (back side)
3 Source

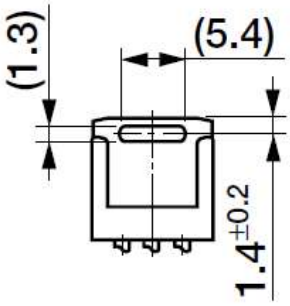

Details of the back (S=2/1)

Marking

a. Type Number: K3800
b. Lot Number
  1st letter: The last digit of year
  2nd letter: 1 to 9 for Jan to Sept, O for Oct,
    N for Nov, D for Dec
  3rd & 4th letter: day (01 to 31)

Caution & Warning 1

(1) Cautions for Storage
- Ensure that storage conditions comply with the standard temperature (5 to 35℃) and the standard relative humidity (around 40 to 75%) and avoid storage locations that experience extreme changes in temperature or humidity.
- Avoid locations where dust or harmful gases are present and avoid direct sunlight.
- Reinspect for rust leads and solderbility that have been stored for a long time.

(2) Cautions for characteristic Test and Handling
- When characteristic tests are carried out during inspection testing and other standard tests periods, protect the Power MOS FETs from surge of power from the testing device, shorts between the Power MOS FETs and the heatsink.

(3) Silicone Grease
- When using a heatsink, please coat the back surface of the Power MOS FETs and both surfaces of the insulating plate with a thin layer of silicone grease to improve heat transfer between the Power MOS FETs and the heatsink. There are types of silicone grease of which oil ingredients may permeate the inside of products. Since there is a possibility that it may shorten the lifetime of the products, please pay sufficient attention to the choice of the silicone grease.

Recommended Silicone grease
- G746 (Shin-Etsu Chemical Co., Ltd.)
- YG6260 (MOMENTIVE performance materials)
- SC102 (Dow Corning Toray Co., Ltd.)

(4) Soldering Temperature
- Recommended soldering conditions (Maximum)
  Refer to following Fig. (Reflow Soldering)
  260℃ 10sec. (Flow Soldering)
  350℃ 3sec. (Solder iron)
  at a distance of 1.5mm from the main body of Power MOS FETs

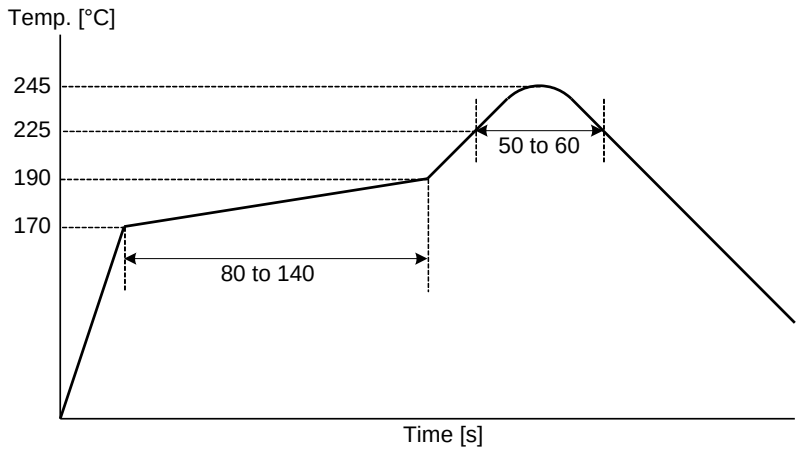

(5) Considerations to protect Power MOS FETs from Electrostatic Discharge
- When handling power MOS FETs device, operator must be grounded. Grounded wrist straps be worm and should have at least 1MΩ of resistance near operators to ground to prevent shock hazard.
- Workbenches where the devices are handled should be grounded and be provided with conductive table and floor mats.
- When using measuring equipment such as a curve tracer, the equipment should also be grounded.
- When soldering the devices, the head of a soldering iron or a solder bath must be grounded in other to prevent leak voltage generated by them from being applied to the devices.
- The devices should always be stored and transported in our shipping containers or conductive containers, or be wrapped up in aluminum foil.

Caution & Warning 2

- The contents in this document are subject to changes, for improvement and other purposes, without notice. Make sure that this is the latest revision of the document before use.

- Application and operation examples described in this document are quoted for the sole purpose of reference for the use of the products herein and Sanken can assume no responsibility for any infringement of industrial property rights, intellectual property rights or any other rights of Sanken or any third party which may result from its use.

- Although Sanken undertakes to enhance the quality and reliability of its products, the occurrence of failure and defect of semiconductor products at a certain rate is inevitable. Users of Sanken products are requested to take, at their own risk, preventative measures including safety design of the equipment or systems against any possible injury, death, fires or damages to the society due to device failure or malfunction.

- Sanken products listed in this document are designed and intended for the use as components in general purpose electronic equipment or apparatus (home appliances, office equipment, telecommunication equipment, measuring equipment, etc.).
  When considering the use of Sanken products in the applications where higher reliability is required (transportation equipment and its control systems, traffic signal control systems or equipment, fire/crime alarm systems, various safety devices, etc.), please contact your nearest Sanken sales representative to discuss, prior to the use of the products herein.
  The use of Sanken products without the written consent of Sanken in the applications where extremely high reliability is required (aerospace equipment, nuclear power control systems, life support systems, etc.) is strictly prohibited.

- In the case that you use our semiconductor devices or design your products by using our semiconductor devices, the reliability largely depends on the degree of derating to be made to the rated values. Derating may be interpreted as a case that an operation range is set by derating the load from each rated value or surge voltage or noise is considered for derating in order to assure or improve the reliability. In general, derating factors include electric stresses such as electric voltage, electric current, electric power etc., environmental stresses such as ambient temperature, humidity etc. and thermal stress caused due to self-heating of semiconductor devices. For these stresses, instantaneous values, maximum values and minimum values must be taken into consideration.
  In addition, it should be noted that since power devices or IC's including power devices have large self-heating value, the degree of derating of junction temperature (Tj) affects the reliability significantly.

- When using the products specified herein by either (i) combining other products or materials therewith or (ii) physically, chemically or otherwise processing or treating the products, please duly consider all possible risks that may result from all such uses in advance and proceed therewith at your own responsibility.

- Anti radioactive ray design is not considered for the products listed herein.

- Sanken assumes no responsibility for any troubles, such as dropping products caused during transportation out of Sanken's distribution network.