Aluminum Capacitors
Standard - 85 °C Snap-In

FEATURES

- Useful life: 2000 h at + 85 °C
- Polarized aluminium electrolytic capacitors
- Small dimension
- High C x U product
- Material categorization: For definitions of compliance please see www.vishay.com/doc?99912

Pb-free
RoHS COMPLIANT

APPLICATIONS

- General purpose audio/video systems, industrial electronics
- Smoothing and filtering
- Standard and switch mode power supplies

QUICK REFERENCE DATA	
DESCRIPTION	**VALUE**
Nominal case size (Ø D x L in mm)	22 x 25 to 40 x 60
Rated capacitance range, C_R	1200 µF to 100 000 µF
Capacitance tolerance	± 20 %
Rated voltage range, U_R	6.3 V to 100 V
Category temperature range	- 40 °C to + 85 °C
Load life at 85 °C	2000 h
Shelf life at 0 V, 85 °C	1000 h
Based on sectional specification	IEC 60384-4/EN 130300
Climatic category IEC 60068	40/85/56

SELECTION CHART FOR C_R, U_R, AND RELEVANT NOMINAL CASE SIZES (Ø D x L in mm)

C_R (µF)	U_R (V)								
	6.3	10	16	25	35	50	63	80	100
1200	-	-	-	-	-	-	-	22 x 25	22 x 30 25 x 25
1500	-	-	-	-	-	-	-	22 x 30	22 x 35 25 x 30 30 x 25
1800	-	-	-	-	-	-	22 x 25	22 x 30 25 x 25	22 x 40 25 x 35 30 x 30
2200	-	-	-	-	-	-	22 x 30 25 x 25	22 x 35 25 x 30 30 x 25	22 x 45 25 x 40 30 x 30
2700	-	-	-	-	-	-	22 x 35 25 x 30	22 x 40 25 x 35 30 x 30	25 x 45 30 x 35 35 x 30
3300	-	-	-	-	-	22 x 30 25 x 25	22 x 35 25 x 30 30 x 25	22 x 45 25 x 40 30 x 30	25 x 50 30 x 40 35 x 35

For technical questions, contact: aluminumcaps3@vishay.com
THIS DOCUMENT IS SUBJECT TO CHANGE WITHOUT NOTICE. THE PRODUCTS DESCRIBED HEREIN AND THIS DOCUMENT ARE SUBJECT TO SPECIFIC DISCLAIMERS, SET FORTH AT www.vishay.com/doc?91000

SELECTION CHART FOR C_R, U_R, AND RELEVANT NOMINAL CASE SIZES (Ø D x L in mm)

C_R (µF)	U_R (V)								
	6.3	10	16	25	35	50	63	80	100
3900	-	-	-	-	-	-	22 x 40 25 x 35 30 x 30	22 x 50 25 x 45 30 x 35	30 x 45 35 x 35
4700	-	-	-	-	22 x 30 25 x 25	22 x 40 25 x 35 30 x 25 35 x 25	22 x 50 25 x 40 30 x 35 35 x 30	25 x 50 30 x 40 35 x 30	30 x 50 35 x 40
5600	-	-	-	22 x 25	22 x 35 25 x 30	22 x 45 25 x 40 30 x 30 35 x 25	25 x 45 30 x 35 35 x 30	30 x 45 35 x 35	35 x 45 40 x 40
6800	-	-	-	22 x 30 25 x 25	22 x 40 25 x 30 30 x 25	22 x 50 25 x 40 30 x 35 35 x 30	25 x 50 30 x 40 35 x 30	35 x 40	40 x 50
8200	-	-	-	22 x 35 25 x 30	22 x 45 25 x 35 30 x 30	25 x 50 30 x 40 35 x 30	30 x 45 35 x 35	35 x 45 40 x 40	40 x 50
10 000	-	-	22 x 25	22 x 40 25 x 30 30 x 25	22 x 50 25 x 40 30 x 30	30 x 45 35 x 35	30 x 50 35 x 40	40 x 50	-
12 000	-	22 x 25	22 x 30 25 x 25	22 x 45 25 x 35 30 x 30	25 x 45 30 x 35 35 x 30	30 x 50 35 x 40	35 x 45 40 x 40	-	-
15 000	-	22 x 30 25 x 25	22 x 35 25 x 30 30 x 25	22 x 50 25 x 40 30 x 35	30 x 40 35 x 35	35 x 45	-	-	-
18 000	22 x 30 25 x 25	22 x 35 25 x 25	22 x 40 25 x 35 30 x 30	25 x 45 30 x 35 35 x 30	30 x 45 35 x 40	35 x 50 40 x 40	-	-	-
22 000	22 x 35	22 x 40 25 x 30 30 x 25	22 x 50 25 x 40 30 x 30	30 x 45 35 x 35	35 x 45 40 x 40	40 x 50	-	-	-
27 000	22 x 40 30 x 25	22 x 45 25 x 35 30 x 30	25 x 45 30 x 35	30 x 50 35 x 40	40 x 50	40 x 60	-	-	-
33 000	22 x 45 25 x 35 30 x 30	22 x 50 25 x 40 35 x 25	30 x 40 35 x 30	35 x 45 40 x 40	40 x 50	-	-	-	-
39 000	22 x 50 25 x 40 35 x 25	25 x 45 30 x 25	30 x 45	-	-	-	-	-	-
47 000	30 x 35 35 x 30	25 x 50 30 x 40	30 x 50 35 x 40	-	-	-	-	-	-
56 000	30 x 40 35 x 30	30 x 45	40 x 40	-	-	-	-	-	-
68 000	-	-	35 x 50	-	-	-	-	-	-
100 000	40 x 40	40 x 50	40 x 60	-	-	-	-	-	-

For technical questions, contact: aluminumcaps3@vishay.com
THIS DOCUMENT IS SUBJECT TO CHANGE WITHOUT NOTICE. THE PRODUCTS DESCRIBED HEREIN AND THIS DOCUMENT ARE SUBJECT TO SPECIFIC DISCLAIMERS, SET FORTH AT www.vishay.com/doc?91000

DIMENSIONS in millimeters **AND AVAILABLE FORMS**

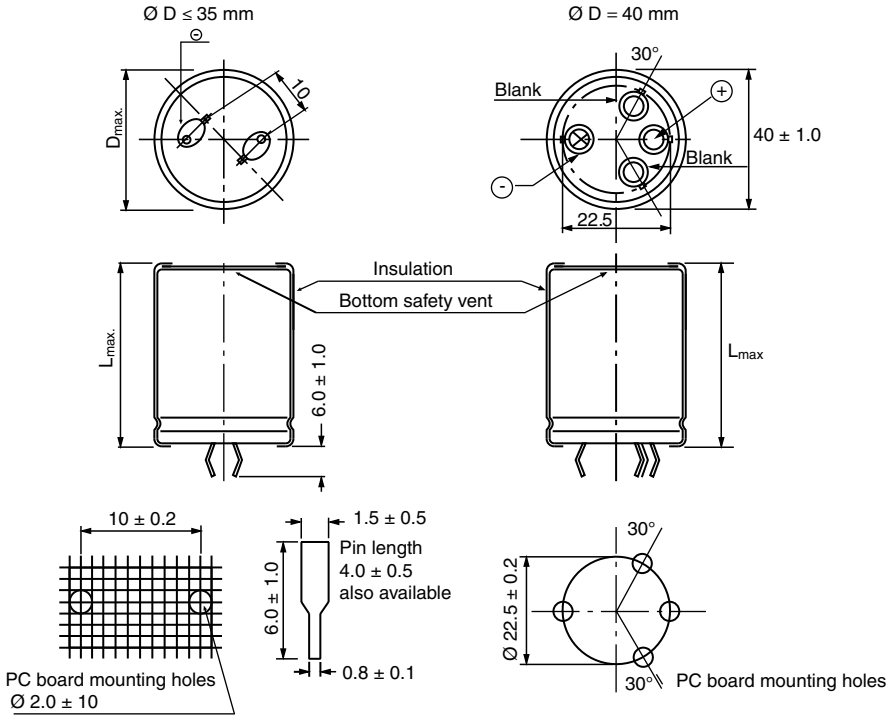

DIMENSIONS in millimeters, **MASS AND PACKAGING QUANTITIES**			
NOMINAL CASE SIZE Ø D x L	**MAXIMUM SIZE Ø $D_{max.}$ x $L_{max.}$**	**MASS (g)**	**PACKAGING QUANTITIES (units per box)**
22 x 25	23 x 27	14	200
22 x 30	23 x 32	16	
22 x 35	23 x 37	19	
22 x 40	23 x 42	22	
22 x 45	23 x 47	24	
22 x 50	23 x 52	27	
25 x 25	26.4 x 27	10	150
25 x 30	26.4 x 32	21	
25 x 35	26.4 x 37	25	
25 x 40	26.4 x 42	28	
25 x 45	26.4 x 47	31	
25 x 50	26.4 x 52	35	
30 x 25	31 x 27	25	100
30 x 30	31 x 32	30	
30 x 35	31 x 37	35	
30 x 40	31 x 42	40	
30 x 45	31 x 47	45	
30 x 50	31 x 52	50	
35 x 25	36 x 27	34	50
35 x 30	36 x 32	41	
35 x 35	36 x 37	48	
35 x 40	36 x 42	55	
35 x 45	36 x 47	62	
35 x 50	36 x 52	68	
40 x 40	41 x 42	72	50
40 x 50	41 x 52	89	
40 x 60	41 x 62	107	

For technical questions, contact: aluminumcaps3@vishay.com
THIS DOCUMENT IS SUBJECT TO CHANGE WITHOUT NOTICE. THE PRODUCTS DESCRIBED HEREIN AND THIS DOCUMENT ARE SUBJECT TO SPECIFIC DISCLAIMERS, SET FORTH AT www.vishay.com/doc?91000

ELECTRICAL DATA

SYMBOL	DESCRIPTION
C_R	Rated capacitance at 120 Hz
U_R	Rated voltage
ESR	Equivalent series resistance at 120 Hz
I_R	Rated RMS ripple current at 120 Hz, 85 °C

Note

- Unless otherwise specified, all electrical values apply at T_{amb} = 20 °C, P = 80 kPa to 120 kPa, RH = 45 % to 75 %.

ORDERING EXAMPLE

Electrolytic capacitor EYN series

4700 µF/35 V; ± 20 %
Nominal case size: 22 mm x 30 mm
Snap-in pin 4 mm, fully insulated

Ordering code: MALIEYN07LV447F42K

ELECTRICAL DATA AND ORDERING INFORMATION

U_R (V)	C_R 120 Hz (µF)	NOMINAL CASE SIZE Ø D x L (mm)	I_R 120 Hz (A)	I_{L5} (µA)	ESR 120 Hz MAX. (Ω)	ORDERING CODE 6 mm PIN LENGTH	ORDERING CODE 4 mm PIN LENGTH
6.3	18 000	22 x 30	3.85	1010	0.033	MALIEYN07LV518B02K	MALIEYN07LV518B42K
	18 000	25 x 25	3.96	1010	0.033	MALIEYN07AU518B02K	MALIEYN07AU518B42K
	22 000	22 x 35	4.34	1117	0.030	MALIEYN07LA522B02K	MALIEYN07LA522B42K
	27 000	22 x 40	4.85	1237	0.027	MALIEYN07LB527B02K	MALIEYN07LB527B42K
	27 000	30 x 25	4.89	1237	0.027	MALIEYN07BU527B02K	MALIEYN07BU527B42K
	33 000	22 x 45	5.36	1368	0.024	MALIEYN07LC533B02K	MALIEYN07LC533B42K
	33 000	25 x 35	5.32	1368	0.024	MALIEYN07AA533B02K	MALIEYN07AA533B42K
	33 000	30 x 30	5.47	1368	0.024	MALIEYN07BV533B02K	MALIEYN07BV533B42K
	39 000	22 x 50	5.83	1487	0.022	MALIEYN07LD539B02K	MALIEYN07LD539B42K
	39 000	25 x 40	5.82	1487	0.022	MALIEYN07AB539B02K	MALIEYN07AB539B42K
	39 000	35 x 25	5.82	1487	0.022	MALIEYN07CU539B02K	MALIEYN07CU539B42K
	47 000	30 x 35	6.26	1632	0.021	MALIEYN07BA547B02K	MALIEYN07BA547B42K
	47 000	35 x 30	6.41	1632	0.021	MALIEYN07CV547B02K	MALIEYN07CV547B42K
	56 000	30 x 40	6.80	1782	0.020	MALIEYN07BB556B02K	MALIEYN07BB556B42K
	56 000	35 x 30	6.64	1782	0.020	MALIEYN07CV556B02K	MALIEYN07CV556B42K
	100 000	40 x 40	8.49	2381	0.017	MALIEYN07DB610B02K	MALIEYN07DB610B42K
10	12 000	22 x 25	3.31	1039	0.044	MALIEYN07LU512C02K	MALIEYN07LU512C42K
	15 000	22 x 30	3.82	1162	0.038	MALIEYN07LV515C02K	MALIEYN07LV515C42K
	15 000	25 x 25	3.39	1162	0.038	MALIEYN07AU515C02K	MALIEYN07AU515C42K
	18 000	22 x 35	4.28	1273	0.034	MALIEYN07LA518C02K	MALIEYN07LA518C42K
	18 000	25 x 25	4.17	1273	0.034	MALIEYN07AU518C02K	MALIEYN07AU518C42K
	22 000	22 x 40	4.79	1407	0.030	MALIEYN07LB522C02K	MALIEYN07LB522C42K
	22 000	25 x 30	4.71	1407	0.030	MALIEYN07AV522C02K	MALIEYN07AV522C42K
	22 000	30 x 25	4.83	1407	0.030	MALIEYN07BU522C02K	MALIEYN07BU522C42K
	27 000	22 x 45	5.30	1559	0.027	MALIEYN07LC527C02K	MALIEYN07LC527C42K
	27 000	25 x 35	5.26	1559	0.027	MALIEYN07AA527C02K	MALIEYN07AA527C42K
	27 000	30 x 30	5.41	1559	0.027	MALIEYN07BV527C02K	MALIEYN07BV527C42K
	33 000	22 x 50	5.82	1723	0.025	MALIEYN07LD533C02K	MALIEYN07LD533C42K
	33 000	25 x 40	5.81	1723	0.025	MALIEYN07AB533C02K	MALIEYN07AB533C42K
	33 000	35 x 25	5.81	1723	0.025	MALIEYN07CU533C02K	MALIEYN07CU533C42K
	39 000	25 x 45	6.31	1873	0.023	MALIEYN07AC539C02K	MALIEYN07AC539C42K
	39 000	35 x 30	6.38	1873	0.023	MALIEYN07CV539C02K	MALIEYN07CV539C42K
	39 000	30 x 35	6.22	1873	0.023	MALIEYN07BA539C02K	MALIEYN07BA539C42K
	47 000	25 x 50	6.83	2057	0.021	MALIEYN07AD547C02K	MALIEYN07AD547C42K
	47 000	30 x 40	6.78	2057	0.021	MALIEYN07BB547C02K	MALIEYN07BB547C42K
	56 000	30 x 45	7.31	2245	0.020	MALIEYN07BC556C02K	MALIEYN07BC556C42K
	100 000	40 x 50	9.35	3000	0.017	MALIEYN07DD610C02K	MALIEYN07DD610C42K
16	10 000	22 x 25	3.32	949	0.046	MALIEYN07LU510D02K	MALIEYN07LU510D42K
	12 000	22 x 30	3.55	1039	0.041	MALIEYN07LV512D02K	MALIEYN07LV512D42K
	12 000	25 x 25	3.89	1039	0.041	MALIEYN07AU512D02K	MALIEYN07AU512D42K
	15 000	22 x 35	4.29	1162	0.035	MALIEYN07LA515D02K	MALIEYN07LA515D42K

For technical questions, contact: aluminumcaps3@vishay.com
THIS DOCUMENT IS SUBJECT TO CHANGE WITHOUT NOTICE. THE PRODUCTS DESCRIBED HEREIN AND THIS DOCUMENT ARE SUBJECT TO SPECIFIC DISCLAIMERS, SET FORTH AT www.vishay.com/doc?91000

ELECTRICAL DATA AND ORDERING INFORMATION

U_R (V)	C_R 120 Hz (µF)	NOMINAL CASE SIZE Ø D x L (mm)	I_R 120 Hz (A)	I_{L5} (µA)	ESR 120 Hz MAX. (Ω)	ORDERING CODE 6 mm PIN LENGTH	ORDERING CODE 4 mm PIN LENGTH
16	15 000	25 x 30	4.45	1162	0.035	MALIEYN07AV515D02K	MALIEYN07AV515D42K
	15 000	30 x 25	4.56	1162	0.035	MALIEYN07BU515D02K	MALIEYN07BU515D42K
	18 000	22 x 40	4.77	1273	0.032	MALIEYN07LB518D02K	MALIEYN07LB518D42K
	18 000	25 x 35	4.96	1273	0.032	MALIEYN07AA518D02K	MALIEYN07AA518D42K
	18 000	30 x 30	5.10	1273	0.032	MALIEYN07BV518D02K	MALIEYN07BV518D42K
	22 000	22 x 50	5.51	1407	0.028	MALIEYN07LD522D02K	MALIEYN07LD522D42K
	22 000	25 x 40	5.51	1407	0.028	MALIEYN07AB522D02K	MALIEYN07AB522D42K
	22 000	30 x 30	5.39	1407	0.028	MALIEYN07BV522D02K	MALIEYN07BV522D42K
	27 000	25 x 45	6.06	1559	0.026	MALIEYN07AC527D02K	MALIEYN07AC527D42K
	27 000	30 x 35	5.98	1972	0.026	MALIEYN07BA527D02K	MALIEYN07BA527D42K
	33 000	30 x 40	6.56	2180	0.023	MALIEYN07BB533D02K	MALIEYN07BB533D42K
	33 000	35 x 30	6.41	2180	0.023	MALIEYN07CV533D02K	MALIEYN07CV533D42K
	39 000	30 x 45	7.08	2370	0.022	MALIEYN07BC539D02K	MALIEYN07BC539D42K
	47 000	30 x 50	7.62	2602	0.020	MALIEYN07BD547D02K	MALIEYN07BD547D42K
	47 000	35 x 40	7.54	2602	0.020	MALIEYN07CB547D02K	MALIEYN07CB547D42K
	56 000	40 x 40	8.23	2840	0.019	MALIEYN07DB556D02K	MALIEYN07DB556D42K
	68 000	35 x 50	8.63	3129	0.018	MALIEYN07CD568D02K	MALIEYN07CD568D42K
	100 000	40 x 60	10.20	3795	0.017	MALIEYN07DF610D02K	MALIEYN07DF610D42K
25	5600	22 x 25	2.65	898	0.083	MALIEYN07LU456E02K	MALIEYN07LU456E42K
	6800	22 x 30	3.06	990	0.071	MALIEYN07LV468E02K	MALIEYN07LV468E42K
	6800	25 x 25	3.15	990	0.071	MALIEYN07AU468E02K	MALIEYN07AU468E42K
	8200	22 x 35	3.45	1087	0.061	MALIEYN07LA482E02K	MALIEYN07LA482E42K
	8200	25 x 30	3.57	1087	0.061	MALIEYN07AV482E02K	MALIEYN07AV482E42K
	10 000	22 x 40	3.95	1200	0.052	MALIEYN07LB510E02K	MALIEYN07LB510E42K
	10 000	25 x 30	3.89	1200	0.052	MALIEYN07AV510E02K	MALIEYN07AV510E42K
	10 000	30 x 25	3.99	1200	0.052	MALIEYN07BU510E02K	MALIEYN07BU510E42K
	12 000	22 x 45	4.41	1643	0.046	MALIEYN07LC512E02K	MALIEYN07LC512E42K
	12 000	25 x 35	4.37	1643	0.046	MALIEYN07AA512E02K	MALIEYN07AA512E42K
	12 000	30 x 30	4.50	1643	0.046	MALIEYN07BV512E02K	MALIEYN07BV512E42K
	15 000	22 x 50	4.94	1837	0.039	MALIEYN07LD515E02K	MALIEYN07LD515E42K
	15 000	25 x 40	4.94	1837	0.039	MALIEYN07AB515E02K	MALIEYN07AB515E42K
	15 000	30 x 35	5.10	1837	0.039	MALIEYN07BA515E02K	MALIEYN07BA515E42K
	18 000	25 x 45	5.45	2012	0.035	MALIEYN07AC518E02K	MALIEYN07AC518E42K
	18 000	30 x 35	5.38	2012	0.035	MALIEYN07BA518E02K	MALIEYN07BA518E42K
	18 000	35 x 30	5.51	2012	0.035	MALIEYN07CV518E02K	MALIEYN07CV518E42K
	22 000	30 x 45	6.22	2225	0.031	MALIEYN07BC522E02K	MALIEYN07BC522E42K
	22 000	35 x 35	6.12	2225	0.031	MALIEYN07CA522E02K	MALIEYN07CA522E42K
	27 000	30 x 50	6.82	2465	0.028	MALIEYN07BD527E02K	MALIEYN07BD527E42K
	27 000	35 x 40	6.74	2465	0.028	MALIEYN07CB527E02K	MALIEYN07CB527E42K
	33 000	35 x 45	7.35	2725	0.025	MALIEYN07CC533E02K	MALIEYN07CC533E42K
	33 000	40 x 40	7.48	2725	0.025	MALIEYN07DB533E02K	MALIEYN07DB533E42K
35	4700	22 x 30	3.06	1028	0.085	MALIEYN07LV447F02K	MALIEYN07LV447F42K
	4700	25 x 25	2.98	1028	0.085	MALIEYN07AU447F02K	MALIEYN07AU447F42K
	5600	22 x 35	3.28	1122	0.073	MALIEYN07LA456F02K	MALIEYN07LA456F42K
	5600	25 x 30	3.39	1122	0.073	MALIEYN07AV456F02K	MALIEYN07AV456F42K
	6800	22 x 40	3.73	1464	0.063	MALIEYN07LB468F02K	MALIEYN07LB468F42K
	6800	25 x 30	3.67	1464	0.063	MALIEYN07AV468F02K	MALIEYN07AV468F42K
	6800	30 x 25	3.76	1464	0.063	MALIEYN07BU468F02K	MALIEYN07BU468F42K
	8200	22 x 45	4.13	1607	0.054	MALIEYN07LC482F02K	MALIEYN07LC482F42K
	8200	25 x 35	4.10	1607	0.054	MALIEYN07AA482F02K	MALIEYN07AA482F42K
	8200	30 x 30	4.22	1607	0.054	MALIEYN07BV482F02K	MALIEYN07BV482F42K
	10 000	22 x 50	4.68	1775	0.047	MALIEYN07LD510F02K	MALIEYN07LD510F42K
	10 000	25 x 40	4.68	1775	0.047	MALIEYN07AB510F02K	MALIEYN07AB510F42K

For technical questions, contact: aluminumcaps3@vishay.com
THIS DOCUMENT IS SUBJECT TO CHANGE WITHOUT NOTICE. THE PRODUCTS DESCRIBED HEREIN AND THIS DOCUMENT ARE SUBJECT TO SPECIFIC DISCLAIMERS, SET FORTH AT www.vishay.com/doc?91000

ELECTRICAL DATA AND ORDERING INFORMATION

U_R (V)	C_R 120 Hz (µF)	NOMINAL CASE SIZE Ø D x L (mm)	I_R 120 Hz (A)	I_{L5} (µA)	ESR 120 Hz MAX. (Ω)	ORDERING CODE 6 mm PIN LENGTH	ORDERING CODE 4 mm PIN LENGTH
35	10 000	30 x 30	4.58	1775	0.047	MALIEYN07BV510F02K	MALIEYN07BV510F42K
	12 000	25 x 45	5.18	1944	0.041	MALIEYN07AC512F02K	MALIEYN07AC512F42K
	12 000	30 x 35	5.11	1944	0.041	MALIEYN07BA512F02K	MALIEYN07BA512F42K
	12 000	35 x 30	5.24	1944	0.041	MALIEYN07CV512F02K	MALIEYN07CV512F42K
	15 000	30 x 40	5.72	2174	0.036	MALIEYN07BB515F02K	MALIEYN07BB515F42K
	15 000	35 x 35	5.88	2174	0.036	MALIEYN07CA515F02K	MALIEYN07CA515F42K
	18 000	30 x 45	6.28	2381	0.032	MALIEYN07BC518F02K	MALIEYN07BC518F42K
	18 000	35 x 40	6.46	2381	0.032	MALIEYN07CB518F02K	MALIEYN07CB518F42K
	22 000	35 x 45	7.07	2632	0.029	MALIEYN07CC522F02K	MALIEYN07CC522F42K
	22 000	40 x 40	7.20	2632	0.029	MALIEYN07DB522F02K	MALIEYN07DB522F42K
	27 000	40 x 50	8.14	2916	0.026	MALIEYN07DD527F02K	MALIEYN07DD527F42K
	33 000	40 x 50	8.46	3224	0.023	MALIEYN07DD533F02K	MALIEYN07DD533F42K
50	3300	22 x 30	2.97	1020	0.100	MALIEYN07LV433H02K	MALIEYN07LV433H42K
	3300	25 x 25	3.06	1020	0.100	MALIEYN07AU433H02K	MALIEYN07AU433H42K
	4700	22 x 40	3.83	1217	0.074	MALIEYN07LB447H02K	MALIEYN07LB447H42K
	4700	25 x 35	3.98	1217	0.074	MALIEYN07AA447H02K	MALIEYN07AA447H42K
	4700	30 x 25	3.86	1454	0.074	MALIEYN07BU447H02K	MALIEYN07BU447H42K
	4700	35 x 25	4.19	1454	0.074	MALIEYN07CU447H02K	MALIEYN07CU447H42K
	5600	22 x 45	4.26	1587	0.065	MALIEYN07LC456H02K	MALIEYN07LC456H42K
	5600	25 x 40	4.44	1587	0.065	MALIEYN07AB456H02K	MALIEYN07AB456H42K
	5600	30 x 30	4.35	1587	0.065	MALIEYN07BV456H02K	MALIEYN07BV456H42K
	5600	35 x 25	4.44	1587	0.065	MALIEYN07CU456H02K	MALIEYN07CU456H42K
	6800	22 x 50	4.77	1749	0.056	MALIEYN07LD468H02K	MALIEYN07LD468H42K
	6800	25 x 40	4.76	1749	0.056	MALIEYN07AB468H02K	MALIEYN07AB468H42K
	6800	30 x 35	4.92	1749	0.056	MALIEYN07BA468H02K	MALIEYN07BA468H42K
	6800	35 x 30	5.04	1749	0.056	MALIEYN07CV468H02K	MALIEYN07CV468H42K
	8200	25 x 50	5.43	1921	0.048	MALIEYN07AD482H02K	MALIEYN07AD482H42K
	8200	30 x 40	5.38	1921	0.048	MALIEYN07BB482H02K	MALIEYN07BB482H42K
	8200	35 x 30	5.26	1921	0.048	MALIEYN07CV482H02K	MALIEYN07CV482H42K
	10 000	30 x 45	6.07	2121	0.042	MALIEYN07BC510H02K	MALIEYN07BC510H42K
	10 000	35 x 35	5.97	2121	0.042	MALIEYN07CA510H02K	MALIEYN07CA510H42K
	12 000	30 x 50	6.62	2324	0.037	MALIEYN07BD512H02K	MALIEYN07BD512H42K
	12 000	35 x 40	6.55	2324	0.037	MALIEYN07CB512H02K	MALIEYN07CB512H42K
	15 000	35 x 45	7.20	2598	0.032	MALIEYN07CC515H02K	MALIEYN07CC515H42K
	18 000	35 x 50	7.74	2846	0.029	MALIEYN07CD518H02K	MALIEYN07CD518H42K
	18 000	40 x 40	7.62	2846	0.029	MALIEYN07DB518H02K	MALIEYN07DB518H42K
	22 000	40 x 50	8.54	3146	0.026	MALIEYN07DD522H02K	MALIEYN07DD522H42K
	27 000	40 x 60	9.45	3486	0.024	MALIEYN07DF527H02K	MALIEYN07DF527H42K
63	1800	22 x 25	2.20	900	0.184	MALIEYN07LU418J02K	MALIEYN07LU418J42K
	2200	22 x 30	2.50	995	0.153	MALIEYN07LV422J02K	MALIEYN07LV422J42K
	2200	25 x 25	2.58	995	0.153	MALIEYN07AU422J02K	MALIEYN07AU422J42K
	2700	22 x 35	2.94	1102	0.127	MALIEYN07LA427J02K	MALIEYN07LA427J42K
	2700	25 x 30	3.04	1237	0.127	MALIEYN07AV427J02K	MALIEYN07AV427J42K
	3300	22 x 35	3.14	1368	0.107	MALIEYN07LA433J02K	MALIEYN07LA433J42K
	3300	25 x 30	3.26	1368	0.107	MALIEYN07AV433J02K	MALIEYN07AV433J42K
	3300	30 x 25	3.34	1368	0.107	MALIEYN07BU433J02K	MALIEYN07BU433J42K
	3900	22 x 40	3.60	1487	0.092	MALIEYN07LB439J02K	MALIEYN07LB439J42K
	3900	25 x 35	3.74	1487	0.092	MALIEYN07AA439J02K	MALIEYN07AA439J42K
	3900	30 x 30	3.85	1487	0.092	MALIEYN07BV439J02K	MALIEYN07BV439J42K
	4700	22 x 50	4.19	1632	0.079	MALIEYN07LD447J02K	MALIEYN07LD447J42K
	4700	25 x 40	4.19	1632	0.079	MALIEYN07AB447J02K	MALIEYN07AB447J42K
	4700	30 x 35	4.10	1632	0.079	MALIEYN07BA447J02K	MALIEYN07BA447J42K
	4700	35 x 30	4.19	1632	0.079	MALIEYN07CV447J02K	MALIEYN07CV447J42K

For technical questions, contact: aluminumcaps3@vishay.com
THIS DOCUMENT IS SUBJECT TO CHANGE WITHOUT NOTICE. THE PRODUCTS DESCRIBED HEREIN AND THIS DOCUMENT ARE SUBJECT TO SPECIFIC DISCLAIMERS, SET FORTH AT www.vishay.com/doc?91000

ELECTRICAL DATA AND ORDERING INFORMATION

U_R (V)	C_R 120 Hz (µF)	NOMINAL CASE SIZE Ø D x L (mm)	I_R 120 Hz (A)	I_{L5} (µA)	ESR 120 Hz MAX. (Ω)	ORDERING CODE 6 mm PIN LENGTH	ORDERING CODE 4 mm PIN LENGTH
63	5600	25 x 45	4.65	1782	0.068	MALIEYN07AC456J02K	MALIEYN07AC456J42K
	5600	30 x 35	4.58	1782	0.068	MALIEYN07BA456J02K	MALIEYN07BA456J42K
	5600	35 x 30	4.70	1782	0.068	MALIEYN07CV456J02K	MALIEYN07CV456J42K
	6800	25 x 50	5.20	1964	0.059	MALIEYN07AD468J02K	MALIEYN07AD468J42K
	6800	30 x 40	5.16	1964	0.059	MALIEYN07BB468J02K	MALIEYN07BB468J42K
	6800	35 x 30	5.04	1964	0.059	MALIEYN07CV468J02K	MALIEYN07CV468J42K
	8200	30 x 45	5.62	2156	0.051	MALIEYN07BC482J02K	MALIEYN07BC482J42K
	8200	35 x 35	5.53	2156	0.051	MALIEYN07CA482J02K	MALIEYN07CA482J42K
	10 000	30 x 50	6.32	2381	0.044	MALIEYN07BD510J02K	MALIEYN07BD510J42K
	10 000	35 x 40	6.25	2381	0.044	MALIEYN07CB510J02K	MALIEYN07CB510J42K
	12 000	35 x 45	6.83	2608	0.039	MALIEYN07CC512J02K	MALIEYN07CC512J42K
	12 000	40 x 40	6.95	2608	0.039	MALIEYN07DB512J02K	MALIEYN07DB512J42K
80	1200	22 x 25	2.24	825	0.221	MALIEYN07LU412W02K	MALIEYN07LU412W42K
	1500	22 x 30	2.67	1039	0.179	MALIEYN07LV415W02K	MALIEYN07LV415W42K
	1800	22 x 30	2.92	1138	0.152	MALIEYN07LV418W02K	MALIEYN07LV418W42K
	1800	25 x 25	3.01	1138	0.152	MALIEYN07AU418W02K	MALIEYN07AU418W42K
	2200	22 x 35	3.25	1259	0.127	MALIEYN07LA422W02K	MALIEYN07LA422W42K
	2200	25 x 30	3.36	1259	0.127	MALIEYN07AV422W02K	MALIEYN07AV422W42K
	2200	30 x 25	3.45	1259	0.127	MALIEYN07BU422W02K	MALIEYN07BU422W42K
	2700	22 x 40	3.79	1394	0.106	MALIEYN07LB427W02K	MALIEYN07LB427W42K
	2700	25 x 35	3.94	1394	0.106	MALIEYN07AA427W02K	MALIEYN07AA427W42K
	2700	30 x 30	4.05	1394	0.106	MALIEYN07BV427W02K	MALIEYN07BV427W42K
	3300	22 x 45	4.18	1541	0.089	MALIEYN07LC433W02K	MALIEYN07LC433W42K
	3300	25 x 40	4.36	1541	0.089	MALIEYN07AB433W02K	MALIEYN07AB433W42K
	3300	30 x 30	4.27	1541	0.089	MALIEYN07BV433W02K	MALIEYN07BV433W42K
	3900	22 x 50	4.75	1676	0.077	MALIEYN07LD439W02K	MALIEYN07LD439W42K
	3900	25 x 45	4.96	1676	0.077	MALIEYN07AC439W02K	MALIEYN07AC439W42K
	3900	30 x 35	4.89	1676	0.077	MALIEYN07BA439W02K	MALIEYN07BA439W42K
	4700	25 x 50	5.44	1840	0.066	MALIEYN07AD447W02K	MALIEYN07AD447W42K
	4700	30 x 40	5.39	1840	0.066	MALIEYN07BB447W02K	MALIEYN07BB447W42K
	4700	35 x 30	5.27	1840	0.066	MALIEYN07CV447W02K	MALIEYN07CV447W42K
	5600	30 x 45	5.91	2008	0.058	MALIEYN07BC456W02K	MALIEYN07BC456W42K
	5600	35 x 35	5.81	2008	0.058	MALIEYN07CA456W02K	MALIEYN07CA456W42K
	6800	35 x 40	5.46	2213	0.050	MALIEYN07CB468W02K	MALIEYN07CB468W42K
	8200	35 x 45	6.91	2430	0.044	MALIEYN07CC482W02K	MALIEYN07CC482W42K
	8200	40 x 40	7.04	2430	0.044	MALIEYN07DB482W02K	MALIEYN07DB482W42K
	10 000	40 x 50	8.14	2683	0.038	MALIEYN07DD510W02K	MALIEYN07DD510W42K
100	1200	22 x 30	2.39	930	0.221	MALIEYN07LV412L02K	MALIEYN07LV412L42K
	1200	25 x 25	2.46	930	0.221	MALIEYN07AU412L02K	MALIEYN07AU412L42K
	1500	22 x 35	2.83	1039	0.179	MALIEYN07LA415L02K	MALIEYN07LA415L42K
	1500	25 x 30	2.93	1039	0.179	MALIEYN07AV415L02K	MALIEYN07AV415L42K
	1500	30 x 25	3.00	1039	0.179	MALIEYN07BU415L02K	MALIEYN07BU415L42K
	1800	22 x 40	3.26	1138	0.152	MALIEYN07LB418L02K	MALIEYN07LB418L42K
	1800	25 x 35	3.39	1138	0.152	MALIEYN07AA418L02K	MALIEYN07AA418L42K
	1800	30 x 30	3.49	1138	0.152	MALIEYN07BV418L02K	MALIEYN07BV418L42K
	2200	22 x 45	3.58	1259	0.127	MALIEYN07LC422L02K	MALIEYN07LC422L42K
	2200	25 x 40	3.74	1259	0.127	MALIEYN07AB422L02K	MALIEYN07AB422L42K
	2200	30 x 30	3.66	1259	0.127	MALIEYN07BV422L02K	MALIEYN07BV422L42K
	2700	25 x 45	4.33	1394	0.106	MALIEYN07AC427L02K	MALIEYN07AC427L42K
	2700	30 x 35	4.27	1394	0.106	MALIEYN07BA427L02K	MALIEYN07BA427L42K
	2700	35 x 30	4.37	1394	0.106	MALIEYN07CV427L02K	MALIEYN07CV427L42K
	3300	25 x 50	4.76	1541	0.089	MALIEYN07AD433L02K	MALIEYN07AD433L42K
	3300	30 x 40	4.72	1541	0.089	MALIEYN07BB433L02K	MALIEYN07BB433L42K

For technical questions, contact: aluminumcaps3@vishay.com
THIS DOCUMENT IS SUBJECT TO CHANGE WITHOUT NOTICE. THE PRODUCTS DESCRIBED HEREIN AND THIS DOCUMENT ARE SUBJECT TO SPECIFIC DISCLAIMERS, SET FORTH AT www.vishay.com/doc?91000

ELECTRICAL DATA AND ORDERING INFORMATION							
U_R (V)	C_R 120 Hz (µF)	NOMINAL CASE SIZE Ø D x L (mm)	I_R 120 Hz (A)	I_{L5} (µA)	ESR 120 Hz MAX. (Ω)	ORDERING CODE 6 mm PIN LENGTH	ORDERING CODE 4 mm PIN LENGTH
100	3300	35 x 35	4.85	1541	0.089	MALIEYN07CA433L02K	MALIEYN07CA433L42K
	3900	30 x 45	5.36	1676	0.077	MALIEYN07BC439L02K	MALIEYN07BC439L42K
	3900	35 x 35	5.27	1676	0.077	MALIEYN07CA439L02K	MALIEYN07CA439L42K
	4700	30 x 50	5.86	1840	0.066	MALIEYN07BD447L02K	MALIEYN07BD447L42K
	4700	35 x 40	5.80	1840	0.066	MALIEYN07CB447L02K	MALIEYN07CB447L42K
	5600	35 x 45	6.34	2008	0.058	MALIEYN07CC456L02K	MALIEYN07CC456L42K
	5600	40 x 40	6.45	2008	0.058	MALIEYN07DB456L02K	MALIEYN07DB456L42K
	6800	40 x 50	7.40	2213	0.050	MALIEYN07DD468L02K	MALIEYN07DD468L42K
	8200	40 x 50	7.60	2430	0.044	MALIEYN07DD482L02K	MALIEYN07DD482L42K

LOW TEMPERATURE BEHAVIOR

Table for the calculation of the maximum 10 kHz impedance at low temperatures:

$$Z(10\ \text{kHz})[\Omega] = \frac{\text{Tabular value}}{C_R\ [\mu F]}$$

T_{amb} (°C)	RATED VOLTAGE U_R (V)														
	6.3	10	16	25	35	50	63	100	160	200	250	350	400	450	500
25	9000	7200	5400	4050	3150	2700	2250	1710	1960	1820	1680	1870	1870	1870	1870
40	30 000	24 000	18 000	13 500	10 500	12 000	10 000	7600	7000	6500	7200	6600	-	-	-

The lower limit of the series resistance and impedance is given by the ohmic part of the contact points and the foil resistance values. Therefore it will not always be possible to achieve calculated values below 0.03 Ω.

LIFETIME TABLE $U_R \leq 100$ V

INTERRELATION BETWEEN ALTERNATING CURRENT, AMBIENT TEMPERATURE AND LIFETIME																
I/I_R (FREQUENCY DEPENDANT)							LIFETIME MULTIPLIER L (DEPENDING ON I/I_R AND T_{amb})									
FREQUENCY (Hz)							AMBIENT TEMPERATURE T_{amb} (°C)									
50	100	120	250	500	1000	> 2500	40	45	50	55	60	65	70	75	80	85
0.00	0.00	0.00	0.00	0.00	0.00	0.00	66	42	27	17	11	7.6	5.1	3.5	2.4	1.7
0.17	0.19	0.20	0.22	0.23	0.23	0.24	62	40	26	17	11	7.4	5.0	3.4	2.3	1.6
0.34	0.39	0.40	0.43	0.45	0.46	0.47	53	34	22	15	9.9	6.7	4.5	3.1	2.2	1.5
0.51	0.58	0.60	0.65	0.68	0.70	0.71	43	28	19	12	8.4	5.8	4.0	2.8	1.9	1.4
0.68	0.78	0.80	0.86	0.90	0.93	0.94	32	22	15	10	6.9	4.8	3.4	2.4	1.7	1.2
0.85	0.97	**1.00**	1.08	1.13	1.16	1.18	23	16	11	7.8	5.5	3.8	2.7	1.9	1.4	**1.00**
1.02	1.17	1.20	1.30	1.35	1.39	1.42	16	12	8.3	5.9	4.2	3.0	2.2	1.6	1.1	
1.20	1.36	1.40	1.51	1.58	1.62	1.65	11	3.3	6.0	4.3	3.1	2.3	1.7	1.2		
1.37	1.56	1.60	1.73	1.81	1.85	1.89	7.7	6.0	4.2	3.1	2.3	1.7	1.3			
1.54	1.75	1.80	1.94	2.03	2.09	2.12	5.1	4.2	2.9	2.2	1.7	1.3				
1.71	1.95	2.00	2.16	2.26	2.32	2.36	3.4	2.9	2.0	1.6	1.2			**combination**		
1.88	2.14	2.20	2.38	2.48	2.55	2.59	2.2	2.0	1.4	1.1				**not**		
2.05	2.34	2.40	2.59	2.71	2.78	2.83	1.5	1.4						**permitted**		
2.22	2.53	2.60	2.81	2.94	3.01	3.07	1.0									

Notes

I_R Rated ripple current (120 Hz, RMS) [A] at upper category temperature T_{uc} taken from datasheet
I User ripple current [A]
T_{amb} Ambient temperature of capacitor [°C]
L Useful life multiplier
Regard L as a function of ambient temperature (x-axis) and of current (y-axis); use the current-axis according to the frequency.

For technical questions, contact: aluminumcaps3@vishay.com
THIS DOCUMENT IS SUBJECT TO CHANGE WITHOUT NOTICE. THE PRODUCTS DESCRIBED HEREIN AND THIS DOCUMENT ARE SUBJECT TO SPECIFIC DISCLAIMERS, SET FORTH AT www.vishay.com/doc?91000

Disclaimer

ALL PRODUCT, PRODUCT SPECIFICATIONS AND DATA ARE SUBJECT TO CHANGE WITHOUT NOTICE TO IMPROVE RELIABILITY, FUNCTION OR DESIGN OR OTHERWISE.

Vishay Intertechnology, Inc., its affiliates, agents, and employees, and all persons acting on its or their behalf (collectively, "Vishay"), disclaim any and all liability for any errors, inaccuracies or incompleteness contained in any datasheet or in any other disclosure relating to any product.

Vishay makes no warranty, representation or guarantee regarding the suitability of the products for any particular purpose or the continuing production of any product. To the maximum extent permitted by applicable law, Vishay disclaims (i) any and all liability arising out of the application or use of any product, (ii) any and all liability, including without limitation special, consequential or incidental damages, and (iii) any and all implied warranties, including warranties of fitness for particular purpose, non-infringement and merchantability.

Statements regarding the suitability of products for certain types of applications are based on Vishay's knowledge of typical requirements that are often placed on Vishay products in generic applications. Such statements are not binding statements about the suitability of products for a particular application. It is the customer's responsibility to validate that a particular product with the properties described in the product specification is suitable for use in a particular application. Parameters provided in datasheets and/or specifications may vary in different applications and performance may vary over time. All operating parameters, including typical parameters, must be validated for each customer application by the customer's technical experts. Product specifications do not expand or otherwise modify Vishay's terms and conditions of purchase, including but not limited to the warranty expressed therein.

Except as expressly indicated in writing, Vishay products are not designed for use in medical, life-saving, or life-sustaining applications or for any other application in which the failure of the Vishay product could result in personal injury or death. Customers using or selling Vishay products not expressly indicated for use in such applications do so at their own risk. Please contact authorized Vishay personnel to obtain written terms and conditions regarding products designed for such applications.

No license, express or implied, by estoppel or otherwise, to any intellectual property rights is granted by this document or by any conduct of Vishay. Product names and markings noted herein may be trademarks of their respective owners.

Material Category Policy

Vishay Intertechnology, Inc. hereby certifies that all its products that are identified as RoHS-Compliant fulfill the definitions and restrictions defined under Directive 2011/65/EU of The European Parliament and of the Council of June 8, 2011 on the restriction of the use of certain hazardous substances in electrical and electronic equipment (EEE) - recast, unless otherwise specified as non-compliant.

Please note that some Vishay documentation may still make reference to RoHS Directive 2002/95/EC. We confirm that all the products identified as being compliant to Directive 2002/95/EC conform to Directive 2011/65/EU.

Vishay Intertechnology, Inc. hereby certifies that all its products that are identified as Halogen-Free follow Halogen-Free requirements as per JEDEC JS709A standards. Please note that some Vishay documentation may still make reference to the IEC 61249-2-21 definition. We confirm that all the products identified as being compliant to IEC 61249-2-21 conform to JEDEC JS709A standards.