Enclosed Switch

D4C

CSM_D4C_DS_E_10_1

Compact Limit Switch That's Also Thin and Highly Sealed

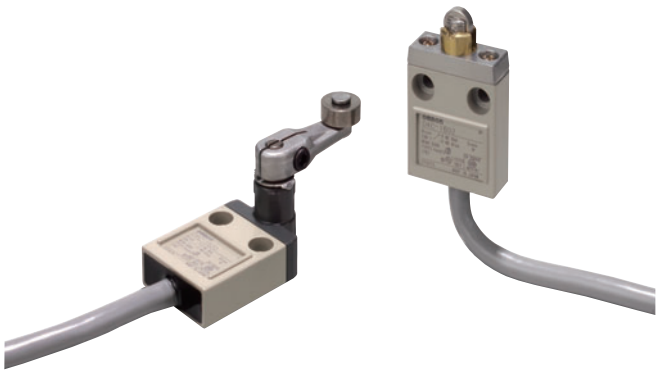

- Approved by EN, UL, CSA, and CCC (Chinese standard). (Ask your OMRON representative for information on approved models.)
- Sealing characteristics that meet IEC IP67 degree of protection.
- Triple-sealed construction:
  Plunger section sealed via nitrile rubber packing seal and diaphragm; switch section sealed via nitrile rubber cap; cable entrance sealed via encapsulating material.
- Cable lengths of 3 and 5 m available on standard models. Models also available with UL and CSA-certified cables.
- Multiple mounting possible with Switches with Plungers.
- Models with red LED indicators added to series for easy confirmation of operation.
  (Set by default to light for non-operation.)
- VCTF oil-resistant cables with CE marking.
  (Applicable only to standard models.)

⚠ Be sure to read *Safety Precautions* on page 13 to 14 and *Safety Precautions for All Limit Switches*.

Model Number Structure

Model Number Legend (Not all combinations are possible. Ask your OMRON representative for details.)

Standard Models

D4C-□□□
(1)(2)(3)

(1) Rated Current

1: 5 A at 250 VAC, 4 A at 30 VDC
2: 5 A at 125 VAC (with LED indicator)
3: 4 A 30 VDC (with LED indicator)
4: 0.1 A at 125 VAC, 0.1 A at 30 VDC
5: 0.1 A at 125 VAC (with LED indicator)
6: 0.1 A at 30 VDC (with LED indicator)

(2) Cable Specifications

2: VCTF oil-resistant cable (3 m)
3: VCTF oil-resistant cable (5 m)
4: VCTF (3 m)
5: VCTF (5 m)
6: SJT(O) (3 m)
7: SJT(O) (5 m)

(3) Actuator

01: Pin plunger
02: Roller plunger
03: Crossroller plunger
20: Roller lever
24: Roller lever (high-sensitivity model)
31: Sealed pin plunger
32: Sealed roller plunger
33: Sealed crossroller
50: Plastic rod
60: Center roller lever

Pre-wired Models

D4C-□0□□-□□□□□□
(1) (2) (3) (4)

(1) Rated Current

1: 1 A at 125 VAC, 1 A at 30 VDC
(Without operation indicator)
2: 1 A at 125 VAC (with operation indicator)
3: 1 A at 30 VDC (with operation indicator)

(2) Actuator

01: Pin plunger
02: Roller plunger
31: Sealed plunger
32: Sealed roller plunger
24: Roller lever (high-sensitivity model)

(3) Wiring Specifications

DK1EJ: Pre-wired models
(3 conductors: DC specification)
AK1EJ: Pre-wired models
(3 conductors: AC specification)
M1J: Connector models for ASI devices
(2 conductors: NO wiring)

(4) Cable length

03: 0.3 m

Wiring Specifications

Internal switch	Connector
COM	3
NC	2
NO	4

Weather-resistant Models

D4C-□□□-P
(1)(2)(3) (4)

(1) Rated Current

1: 5 A at 250 VAC, 4 A at 30 VDC
2: 5 A at 125 VAC (with LED indicator)
3: 4 A at 30 VDC (with LED indicator)
4: 0.1 A at 125 VAC, 0.1 A at 30 VDC

(2) Cable Specifications

2: VCTF oil-resistant cable (3 m)
3: VCTF oil-resistant cable (5 m)

(3) Actuator

20: Roller lever
24: Roller lever (high-sensitivity model)
27: Adjustable roller lever
29: Adjustable rod lever

(4) Structure

P: Weather-resistant

Ordering Information

Switches

Standard Switches with No Operation Indicator

Actuator	Ratings Cable Cable length (m)	Standard load			Microload	
		5 A at 250 VAC, 4 A at 30 VDC			0.1 A at 125 VAC, 0.1 A at 30 VDC	
		VCTF oil-resistant cable *1	VCTF cable *2	SJT(O) cable *3	VCTF oil-resistant cable *1	VCTF cable *2
		Model				
Pin plunger	3	**D4C-1201**	**D4C-1401**	**D4C-1601**	**D4C-4201**	**D4C-4401**
	5	**D4C-1301**	**D4C-1501**	**D4C-1701**	**D4C-4301**	**D4C-4501**
Roller plunger	3	**D4C-1202**	**D4C-1402**	**D4C-1602**	**D4C-4202**	**D4C-4402**
	5	**D4C-1302**	**D4C-1502**	**D4C-1702**	**D4C-4302**	**D4C-4502**
Crossroller plunger	3	**D4C-1203**	**D4C-1403**	**D4C-1603**	**D4C-4203**	**D4C-4403**
	5	**D4C-1303**	**D4C-1503**	**D4C-1703**	**D4C-4303**	**D4C-4503**
Roller lever	3	**D4C-1220**	**D4C-1420**	**D4C-1620**	**D4C-4220**	**D4C-4420**
	5	**D4C-1320**	**D4C-1520**	**D4C-1720**	**D4C-4320**	**D4C-4520**
Roller lever, high-sensitivity	3	**D4C-1224**	**D4C-1424**	**D4C-1624**	**D4C-4224**	**D4C-4424**
	5	**D4C-1324**	**D4C-1524**	**D4C-1724**	**D4C-4324**	**D4C-4524**
Sealed pin plunger	3	**D4C-1231**	**D4C-1431**	**D4C-1631**	**D4C-4231**	**D4C-4431**
	5	**D4C-1331**	**D4C-1531**	**D4C-1731**	**D4C-4331**	**D4C-4531**
Sealed roller plunger	3	**D4C-1232**	**D4C-1432**	**D4C-1632**	**D4C-4232**	**D4C-4432**
	5	**D4C-1332**	**D4C-1532**	**D4C-1732**	**D4C-4332**	**D4C-4532**
Sealed crossroller plunger	3	**D4C-1233**	**D4C-1433**	**D4C-1633**	**D4C-4233**	**D4C-4433**
	5	**D4C-1333**	**D4C-1533**	**D4C-1733**	**D4C-4333**	**D4C-4533**
Plastic rod	3	**D4C-1250**	**D4C-1450**	**D4C-1650**	**D4C-4250**	**D4C-4450**
	5	**D4C-1350**	**D4C-1550**	**D4C-1750**	**D4C-4350**	**D4C-4550**
Center roller lever	3	**D4C-1260**	**D4C-1460**	**D4C-1660**	**D4C-4260**	**D4C-4460**
	5	**D4C-1360**	**D4C-1560**	---	**D4C-4360**	**D4C-4560**

Note: 1. Models are available separately with resistance to viscous oils (oil drain holes are provided), but only with Plunger Models. Add "-M" to the model number (example: D4C-1202 would be D4C-1202-M). Ask your nearest OMRON representative for details.
2. Switches with variable roller levers are also available. Ask your nearest OMRON representative for details.

*1. Oil-resistant vinyl cabtire cables; approved by EN and IEC.
*2. Ordinary vinyl cabtire cables; approved by EN and IEC.
*3. Switches with SJT(O) Cables (cables approved by UL and CSA) are approved by UL and CSA.

Standard Switches with Operation Indicator (Red)

Actuator	Ratings Cable length (m)	0.1 A at 125 VAC		0.1 A at 30 VDC	
		VCTF oil-resistant cable *1	VCTF cable *2	VCTF oil-resistant cable *1	VCTF cable *2
		Model			
Pin plunger	3	**D4C-2201**	**D4C-2401**	**D4C-3201**	**D4C-3401**
	5	**D4C-2301**	**D4C-2501**	**D4C-3301**	**D4C-3501**
Roller plunger	3	**D4C-2202**	**D4C-2402**	**D4C-3202**	**D4C-3402**
	5	**D4C-2302**	**D4C-2502**	**D4C-3302**	**D4C-3502**
Crossroller plunger	3	**D4C-2203**	**D4C-2403**	**D4C-3203**	**D4C-3403**
	5	**D4C-2303**	**D4C-2503**	**D4C-3303**	**D4C-3503**
Roller lever	3	**D4C-2220**	**D4C-2420**	**D4C-3220**	**D4C-3420**
	5	**D4C-2320**	**D4C-2520**	**D4C-3320**	**D4C-3520**
Roller lever, high-sensitivity	3	**D4C-2224**	**D4C-2424**	**D4C-3224**	**D4C-3424**
	5	**D4C-2324**	**D4C-2524**	**D4C-3324**	**D4C-3524**
Sealed pin plunger	3	**D4C-2231**	**D4C-2431**	**D4C-3231**	**D4C-3431**
	5	**D4C-2331**	**D4C-2531**	**D4C-3331**	**D4C-3531**
Sealed roller plunger	3	**D4C-2232**	**D4C-2432**	**D4C-3232**	**D4C-3432**
	5	**D4C-2332**	**D4C-2532**	**D4C-3332**	**D4C-3532**
Sealed crossroller plunger	3	**D4C-2233**	**D4C-2433**	**D4C-3233**	**D4C-3433**
	5	**D4C-2333**	**D4C-2533**	**D4C-3333**	**D4C-3533**
Plastic rod	3	**D4C-2250**	**D4C-2450**	**D4C-3250**	**D4C-3450**
	5	**D4C-2350**	**D4C-2550**	**D4C-3350**	**D4C-3550**
Center roller lever	3	**D4C-2260**	**D4C-2460**	**D4C-3260**	**D4C-3460**
	5	**D4C-2360**	**D4C-2560**	**D4C-3360**	**D4C-3560**

Note: Ask your nearest OMRON representative for information on Switching with approved international standards.
*1. Oil-resistant vinyl cabtire cables; approved by EN and IEC.
*2. Ordinary vinyl cabtire cables.; approved by EN and IEC.

Standard Switches with Operation Indicator

Actuator	Cable length (m)	0.1 A at 125 VAC VCTF oil-resistant cable*	0.1 A at 30 VDC VCTF oil-resistant cable*
		Model	
Pin plunger	3	**D4C-5201**	**D4C-6201**
	5	---	**D4C-6301**
Roller plunger	3	**D4C-5202**	**D4C-6202**
	5	**D4C-5302**	**D4C-6302**
Crossroller plunger	3	**D4C-5203**	**D4C-6203**
	5	**D4C-5303**	**D4C-6303**
Roller lever	3	**D4C-5220**	**D4C-6220**
	5	**D4C-5320**	**D4C-6320**
Roller lever, high-sensitivity	3	**D4C-5224**	**D4C-6224**
	5	**D4C-5324**	**D4C-6324**
Sealed pin plunger	3	---	**D4C-6231**
	5	---	**D4C-6331**
Sealed roller plunger	3	**D4C-5232**	**D4C-6232**
	5	**D4C-5332**	**D4C-6332**
Sealed crossroller plunger	3	---	**D4C-6233**
	5	---	**D4C-6333**
Plastic rod	3	**D4C-5250**	**D4C-6250**
	5	**D4C-5350**	**D4C-6350**

Note: Ask your nearest OMRON representative for information on Switching with approved international standards.
* Oil-resistant vinyl cabtire cables; approved by EN and IEC.

Pre-wired Models (Use VCTF Oil-resistant Cable)

Actuator	Ratings Operation indicator	1 A at 125 VAC Without operation indicator	1 A at 125 VAC With operation indicator	1 A at 30 VDC Without operation indicator	1 A at 30 VDC With operation indicator
Pin plunger		---	---	---	**D4C-3001-DK1EJ□**
Roller plunger		**D4C-1002-AK1EJ□**	**D4C-2002-AK1EJ□**	**D4C-1002-DK1EJ□**	**D4C-3002-DK1EJ□**
Sealed plunger		---	---	---	**D4C-3031-DK1EJ□**
Sealed roller plunger		---	---	**D4C-1032-DK1EJ□**	**D4C-3032-DK1EJ□**
Roller lever (high-sensitivity model)		---	**D4C-2024-AK1EJ□**	**D4C-1024-DK1EJ□**	**D4C-3024-DK1EJ□**

Note: 1. The □ contains the length of the cable.
For example: 30 cm → D4C-2002-AK1EJ03
2. M1J models are also available. Contact your OMRON sales representative for further information.
3. Of the above model numbers, some with special specifications are not registered.

Weather-resistant Models

Actuator	Cable length (m)	Operation indicator Ratings Without operating indication Standard load 5 A at 250 VAC 4 A at 30 VDC	Without operating indication Microload 0.1 A at 125 VAC 0.1 A at 30 VDC	With operating indication Standard load 5 A at 125 VAC	With operating indication Standard load 4 A at 30 VDC
		VCTF oil-resistant cable			
		Model			
Roller lever	3	**D4C-1220-P**	**D4C-4220-P**	**D4C-2220-P**	**D4C-3220-P**
	5	**D4C-1320-P**	**---**	**---**	**---**
Roller lever (high-sensitivity model)	3	**D4C-1224-P**	**D4C-4224-P**	**D4C-2224-P**	**D4C-3224-P**
	5	**D4C-1324-P**	**D4C-4324-P**	**D4C-2324-P**	**D4C-3324-P**
Adjustable roller lever	3	**D4C-1227-P**	**D4C-4227-P**	**D4C-2227-P**	**D4C-3227-P**
	5	**D4C-1327-P**	**D4C-4327-P**	**D4C-2327-P**	**D4C-3327-P**
Adjustable rod lever	3	**D4C-1229-P**	**D4C-4229-P**	**---**	**D4C-3229-P**
	5	**D4C-1329-P**	**---**	**D4C-2329-P**	**D4C-3329-P**

Note: Silicon rubber is used to increase resistance to the environment. Silicon rubber, however, can generate silicon gas. (This can occur at room temperature, but the amount of silicon gas generated increases at higher temperatures.) Silicon gas will react as a result of arc energy and form silicon oxide (SiO_2). If silicon oxide accumulates on the contacts, contact interference can occur and can interfere with the device. Before using a Switch, test it under actual application conditions (including the environment and operating frequency) to confirm that no problems will occur in actual.

Applicable Cables

Appearance	No. of conductors	Type: Cable length	For AC: Model	For DC: Model
Straight	4	2 m	**XS2F-A421-D90-A**	**XS2F-D421-D80-A**
		5 m	**XS2F-A421-G90-A**	**XS2F-D421-G80-A**

Mounting Plates (Order Separately)

The WL model incorporated by equipment can be replaced with the D4C together with the Mounting Plate without changing the position of the dog or cam.

List of Replaceable Models

WL model (Actuator)	D4C model (Actuator)	Plate
WLD/WL01D (Top plunger)	→ D4C-□□01 (Plunger)	**D4C-P001**
WLD2/WL01D2 (Top roller plunger)	→ D4C-□□02 (Roller plunger)	**D4C-P002**
WLCA2/WL01CA2 (Roller lever)	→ D4C-□□20 (Roller lever)	**D4C-P020**

Note: The WL01□ is for micro loads.

Example of Replacement

Note: The position of the dog remains unchanged.

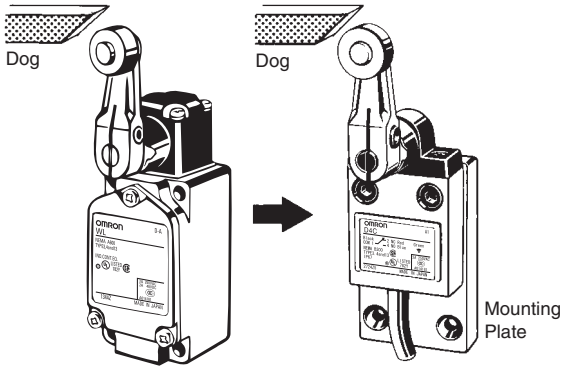

Individual Parts

Head/Actuator

Actuator	Head (with actuator)	Actuator
Pin plunger	**D4C-0001**	**---**
Roller plunger	**D4C-0002**	**---**
Crossroller plunger	**D4C-0003**	**---**
Roller lever	**D4C-0020**	**WL-1A100**
Roller lever (weather-resistant model)	**---**	**WL-1A100P1**
Roller lever (high-sensitivity model)	**D4C-0024**	**WL-1A100**
Variable roller lever	**D4C-0027**	**---**
Variable rod lever	**D4C-0029**	**HL-1HPA500**
Sealed pin plunger	**D4C-0031**	**---**
Sealed roller plunger	**D4C-0032**	**---**
Sealed crossroller plunger	**D4C-0033**	**---**
Plastic rod	**D4C-0050**	**---**
Center roller lever	**D4C-0060**	**---**

Note: 1. The model numbers for heads are of the form D4C-00□□, with the numbers in the squares indicating the type of actuator.
2. Actuators for plunger models, plastic rod models, and center roller lever models cannot be ordered individually. They must be ordered together with the head.

Specifications

Approved Standards

Agency	Standard	File No.
TÜV Product Service	EN60947-5-1	*1, 3
UL	UL508	E76675 *2
CSA	CSA C22.2 No.14	LR45746 *2
CCC(CQC)	GB14048.5	2003010305077626 *3

*1. Models with VCTF, VCTF oil-resistant cables and pre-wired models only. (Applicable only to standard models listed on pages 2 to 4.) "CE" mark is applicable only for VCTF oil-resistant cables and pre-wired models.
*2. SJT(O)-cable models only. (Applicable only to models listed on pages 2 to 3.)
*3. Ask your OMRON representative for information on approved models.

Ratings

Standard Model

Rated voltage	Non-inductive load (A)				Inductive load (A)			
	Resistive load		Lamp load		Inductive load		Motor load	
	NC	NO	NC	NO	NC	NO	NC	NO
125 VAC	5 (0.1)		1.5	0.7	3		2.5	1.3
250 VAC	5		1	0.5	2		1.5	0.8
8 VDC	5 (0.1)		2		5	4	3	
14 VDC	5 (0.1)		2		4	4	3	
30 VDC	4 (0.1)		2		3	3	3	
125 VDC	0.4		0.05		0.4		0.05	
250 VDC	0.2		0.03		0.2		0.03	

Inrush current	NC	20 A max.
	NO	10 A max.

Note: 1. The values given on the left are steady-state currents.
2. Inductive loads have a power factor of 0.4 min. (AC) and a time constant of 7 ms max. (DC).
3. Lamp loads have an inrush current of 10 times the steady-state current.
4. Motor loads have an inrush current of 6 times the steady-state current.
5. The values "0.1" given in parentheses are for micro load models.

Pre-wired Model

Rated voltage	Non-inductive load (A)				Inductive load (A)			
	Resistive load		Lamp load		Inductive load		Motor load	
	NC	NO	NC	NO	NC	NO	NC	NO
125 VAC	1	1	1	0.7	1	1	1	1
30 VDC	1	1	1	1	1	1	1	1

Approved Standard Ratings

TÜV (EN60947-5-1), CCC (GB14048.5)

Model	Applicable category and ratings	I the
D4C-1□□□	AC-15 2 A/250 V DC-12 2 A/30 V	5 A 4 A
D4C-2□□□	AC-15 2 A/125 V	5 A
D4C-3□□□	DC-12 2 A/30 V	4 A
D4C-4□□□	AC-14 0.1 A/125 V DC-12 0.1 A/30 V	0.5 A 0.5 A
D4C-5□□□	AC-14 0.1 A/125 V	0.5 A
D4C-6□□□	DC-12 0.1 A/30 V	0.5 A

UL/CSA

B300 (D4C-16□□, -17□□)
B150 (D4C-26□□, -27□□)

B300

Rated voltage	Carry current	Current (A)		Volt-amperes (VA)	
		Make	Break	Make	Break
120 VAC	5 A	30	3	3,600	360
240 VAC		15	1.5	3,600	360

B150

Rated voltage	Carry current	Current (A)		Volt-amperes (VA)	
		Make	Break	Make	Break
120 VAC	5 A	30	3	3,600	360

Characteristics

Degree of protection		IP67
Durability *1	Mechanical *3	10,000,000 operations min.
	Electrical *2	200,000 operations min. (5 A at 125 VAC, resistive load)
Operating speed		0.1 mm/s to 0.5 m/s (in case of plunger) 1 mm/s to 1 m/s (in case of roller lever)
Operating frequency	Mechanical	120 operations/min
	Electrical	30 operations/min
Rated frequency		50/60 Hz
Insulation resistance		100 MΩ min. (at 500 VDC)
Contact resistance (initial)		250 mΩ max. (initial value with 2-m VCTF cable) 300 mΩ max. (initial value with 3-m VCTF cable) 400 mΩ max. (initial value with 5-m VCTF cable)
Dielectric strength	Between terminals of the same polarity	1,000 VAC, 50/60 Hz for 1 min
	Between current-carrying metal part and ground	1,500 VAC, 50/60 Hz for 1 min Uimp: 2.5 kV (EN60947-5-1)
	Between each terminal and non-current-carrying metal part,	1,500 VAC, 50/60 Hz for 1 min Uimp: 2.5 kV(EN60947-5-1)
Rated insulation voltage (Ui)		300 V (EN60947-5-1) *5
Pollution degree (operating environment)		3 (EN60947-5-1)
Short-circuit protective device (SCPD)		10 A fuse type gI or gG (IEC60269)
Conditional short-circuit current		100 A (EN60947-5-1)
Conventional enclosed thermal current (I the)		5 A, 4 A, 0.5 A (EN60947-5-1)
Protection against electric shock		Class I (with grounding wire) *6
Vibration resistance	Malfunction	10 to 55 Hz, 1.5-mm double amplitude *4
Shock resistance	Destruction	1,000 m/s² min.
	Malfunction	500 m/s² min. *4
Ambient operating temperature		−10°C to +70°C (with no icing)
Ambient operating humidity		35% to 95%RH
Weight (D4C-1202)		With 3-m VCTF cable: 360 g With 5-m VCTF cable: 540 g

Note: The above figures are initial values.
*1. The values are calculated at an operating temperature of +5°C to +35°C, and an operating humidity of 40% to 70%RH. Contact your OMRON sales representative for more detailed information on other operating environments.
*2. Pre-wired Models: 1,000,000 operations min. (DC specifications, switching current: 0.1 A)
*3. Outdoor specifications: 500,000 operations min.
*4. Excluding Plastic Rods.
*5. Pre-wired models: 250 V
*6. Pre-wired models: class III

Engineering Data

Electrical Durability

D4C-1□□□, -2□□□, -3□□□

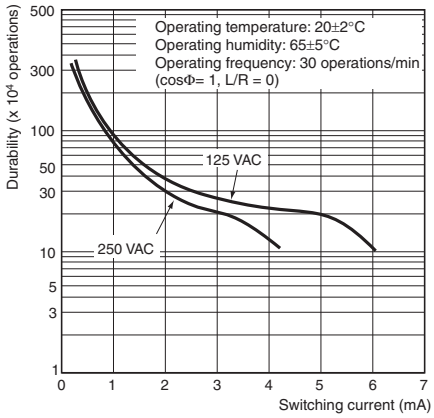

D4C-4□□□, -5□□□, -6□□□

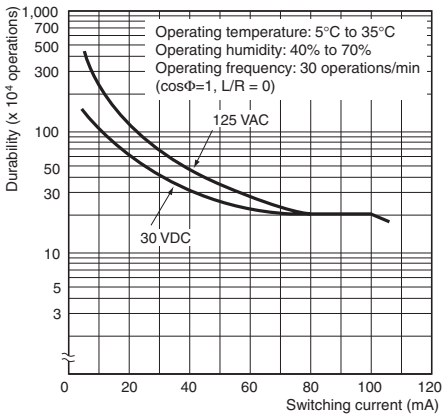

Leakage Current for LED-indicator Models

The leakage currents and resistances of LED-indicator models are given in the following table.

Model	Voltage	Leakage current	Resistance
D4C-2□□□	125 VAC	1.7 mA	68 kΩ
D4C-3□□□	30 VDC	1.7 mA	15 kΩ
D4C-5□□□	125 VAC	1.7 mA	68 kΩ
D4C-6□□□	30 VDC	1.7 mA	15 kΩ

Structure and Nomenclature

Structure

Standard Models

Roller Lever Models Without Indicator

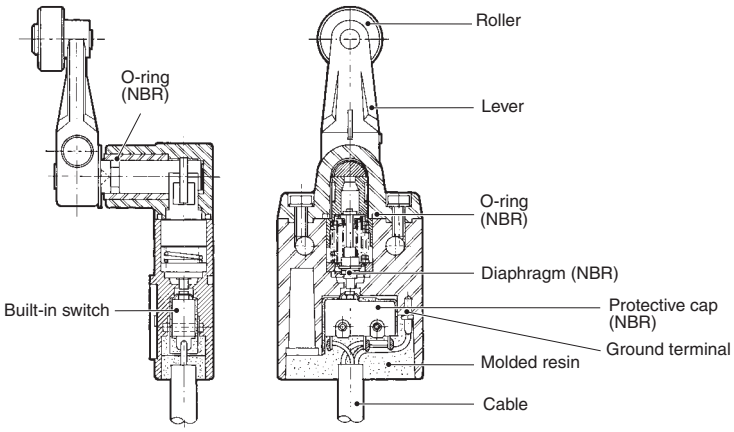

Weather-resistant Models

Roller Lever Models Without Indicator

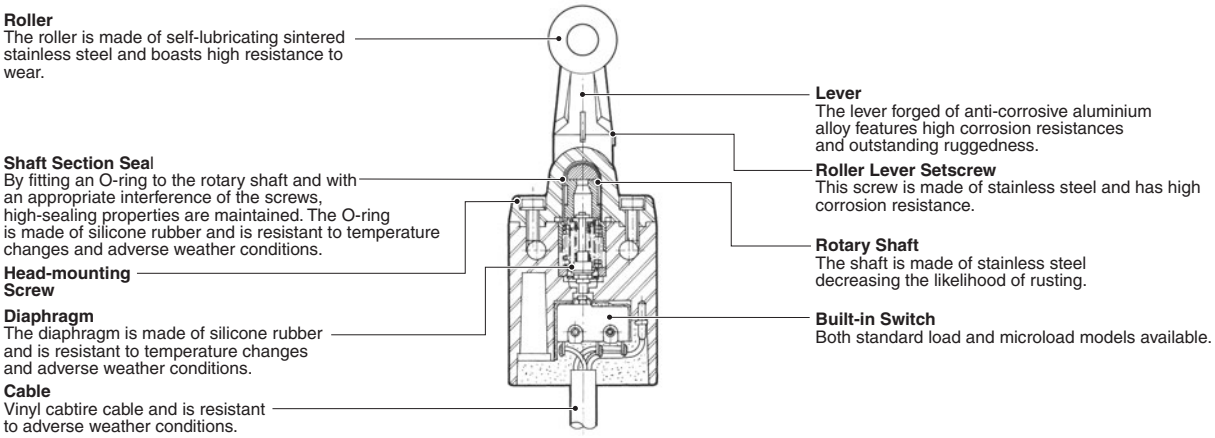

Contact Form

Standard Models/Weather-resistant Models

Without Operation Indicator

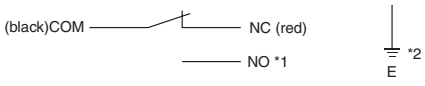

With Operation Indicator (Lit when Not Actuated)

<24 VDC LED>

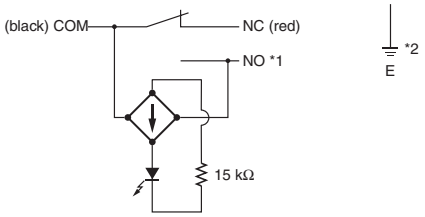

<100 VAC LED>

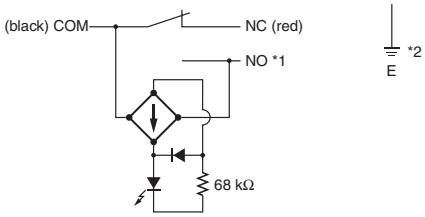

Connector Models for ASI Devices (-M1J)

Without Operation Indicator

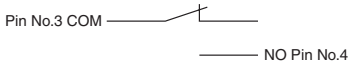

With Operation Indicator (Lit when Not Actuated)

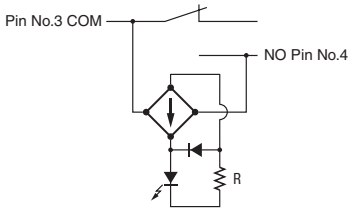

For DC

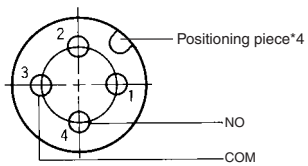

Pre-wired Models (-AK1EJ□, -DK1EJ□)

Without Operation Indicator

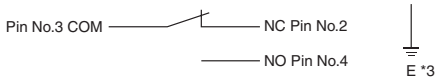

With Operation Indicator (Lit when Not Actuated)

<24 VDC LED>

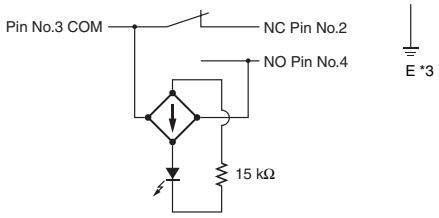

<100 VAC LED>

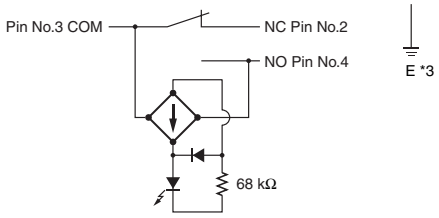

For AC

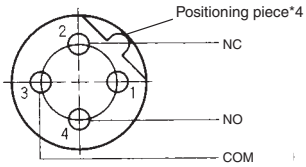

For DC

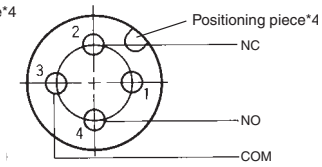

*1. NO (white): VCTF oil-resistant cable or VCTF cable.
NO (blue): SJT (O) cable approved by UL and CSA.
*2. E (yellow/green): VCTF oil-resistant cable.
E (green): VCTF cable or SJT (O) cable approved by UL and CSA.
*3. E (ground) is not grounded.
*4. The position of the positioning piece is not fixed. Using an L-shaped connector may result in failure. Use only a straight connector.

Note: 1. "Lit when not Actuated" means that when the actuator is in the free position, the indicator is lit, and when the actuator is turned or pushed and the contact comes into contact with the NO side, the indicator turns OFF.
2. Leakage current from indicator circuit may cause load's malfunction. Please check the load's OFF current before use the indicator-equipped switch.

Dimensions and Operating Characteristics

Switches

Standard Models

Models without LED indicators are shown in the illustrations and dimensions diagrams. Refer to page 11 for *Models with LED Indicators*. The boxes in the model numbers are replaced with the rating and cable type. Refer to page 1 for the *Model Number Structure*.

Pin Plunger
D4C-□□01

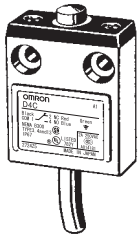

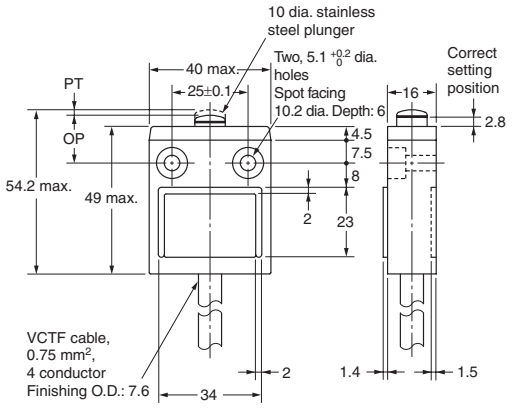

Roller Plunger
D4C-□□02

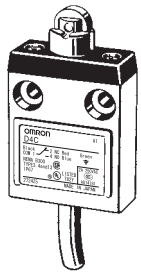

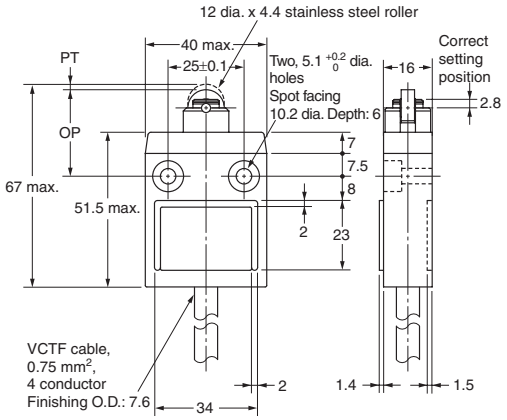

Crossroller Plunger
D4C-□□03

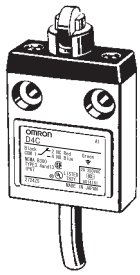

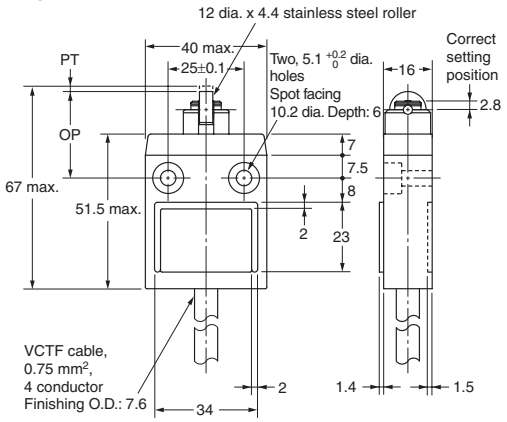

Roller Lever
D4C-□□20
D4C-□□20-P

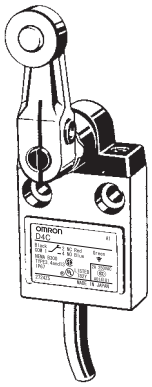

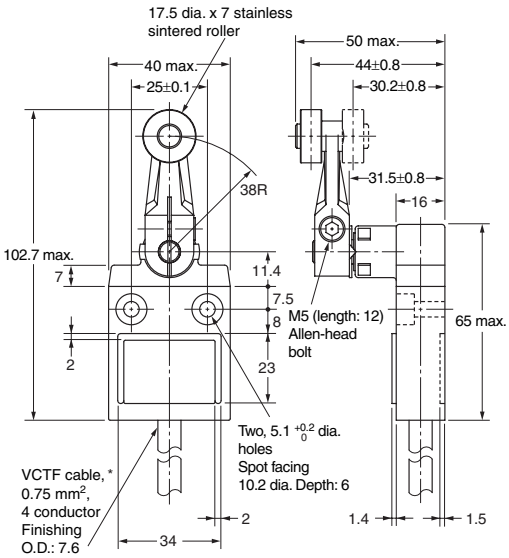

* S-FLEX VCTF Cables are used for weather-resistant models.

Roller Lever (High-Sensitivity Model)
D4C-□□24
D4C-□□24-P

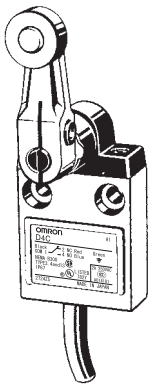

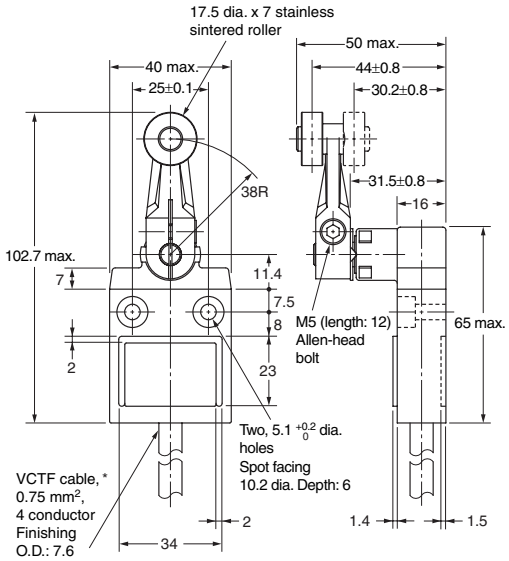

* S-FLEX VCTF Cables are used for weather-resistant models.

Note: Unless otherwise specified, a tolerance of ±0.4 mm applies to all dimensions.

Operating characteristics		Model	D4C-□□01	D4C-□□02	D4C-□□03	D4C-□□20 D4C-□□20-P	D4C-□□24 D4C-□□24-P
Operating force	OF	max.	11.77 N	11.77 N	11.77 N	5.69 N	5.69 N
Release force	RF	min.	4.41 N	4.41 N	4.41 N	1.47 N	1.47 N
Pretravel	PT	max.	1.8 mm	1.8 mm	1.8 mm	25°	10°±3°
Overtravel	OT	min.	3 mm	3 mm	3 mm	40°	50°
Movement Differential	MD	max.	0.2 mm	0.2 mm	0.2 mm	3°	3°
Operating Position	OP		15.7±1 mm	28.5±1 mm	28.5±1 mm	---	---

Sealed Plunger
D4C-□□31

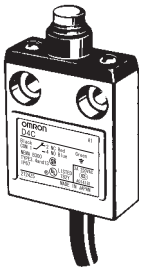

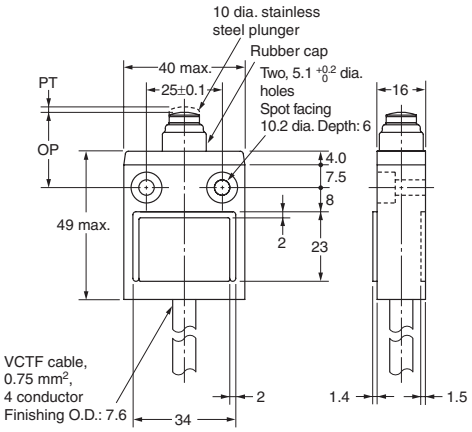

Sealed Roller Plunger
D4C-□□32

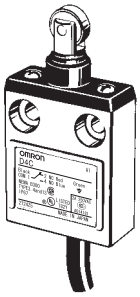

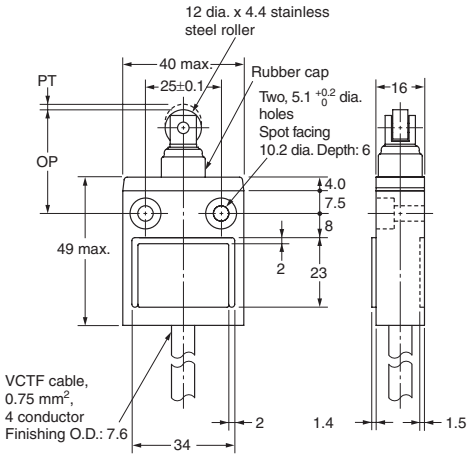

Sealed Crossroller Plunger
D4C-□□33

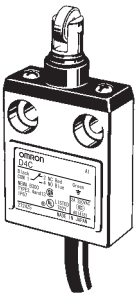

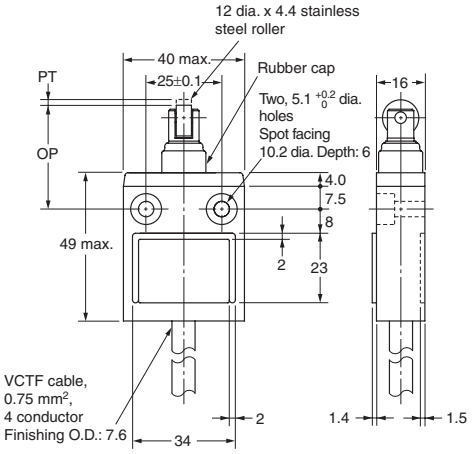

Note: Unless otherwise specified, a tolerance of ±0.4 mm applies to all dimensions.

Operating characteristics		Model	D4C-□□31	D4C-□□32	D4C-□□33
Operating force	OF	max.	17.65 N	17.65 N	17.65 N
Release force	RF	min.	4.41 N	4.41 N	4.41 N
Pretravel	PT	max.	1.8 mm	1.8 mm	1.8 mm
Overtravel	OT	min.	3 mm	3 mm	3 mm
Movement Differential	MD	max.	0.2 mm	0.2 mm	0.2 mm
Operating Position	OP		24.9±1 mm	34.3±1 mm	34.3±1 mm
Total travel	TT *		(5) mm	(5) mm	(5) mm

* The TT is a reference value.

Plastic rod
D4C-□□50

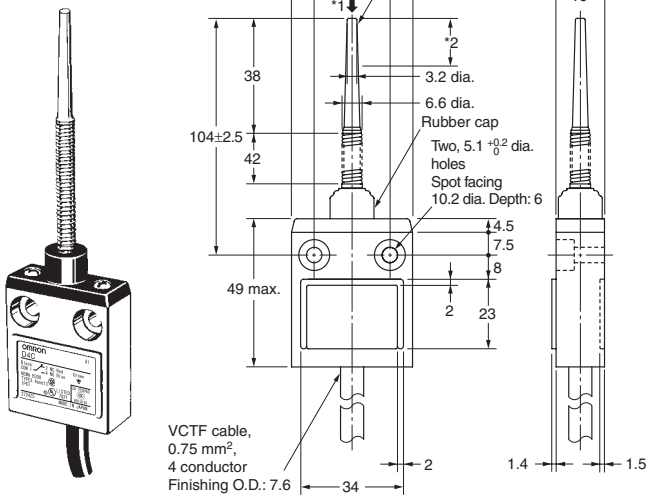

*1 Operation is possible in any direction except in parallel to the axis.
*2 The ideal range for operation is between the tip of the rod and 1/3 of the length of the actuator.

Center Roller Lever Plunger
D4C-□□60

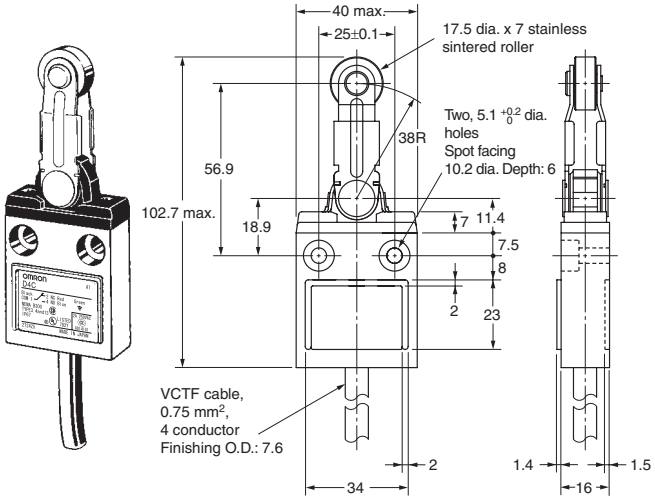

Note: Unless otherwise specified, a tolerance of ±0.4 mm applies to all dimensions.

Operating characteristics	Model		D4C-□□50	D4C-□□60
Operating force	OF	max.	1.47 N	6.67 N
Release force	RF	min.	---	1.47 N
Pretravel	PT	max.	15°	10°±3°
Overtravel	OT	min.	---	50°
Movement Differential	MD	max.	---	3°
Operating Position	OP		---	---
Total travel	TT		---	---

Models with LED Indicator

The dimensions of the LED indicator for models equipped with one are shown below.

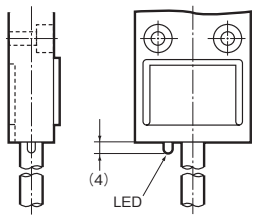

Pre-wired Models

Pin Plunger
D4C-□001-□K1EJ□
D4C-□001-M1J□

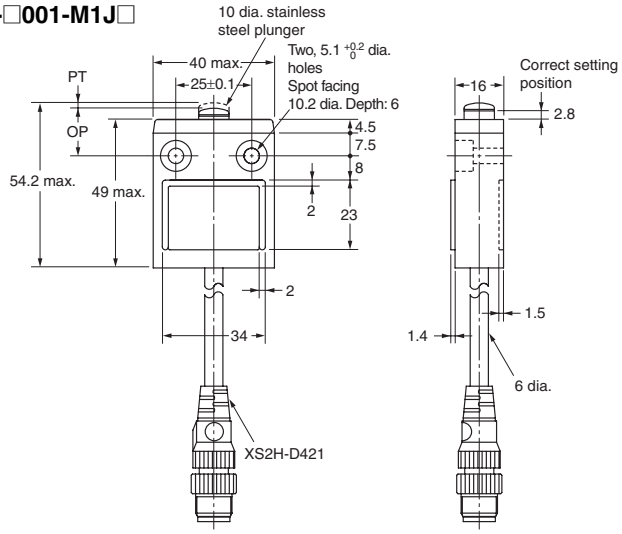

Roller Plunger
D4C-□002-□K1EJ□
D4C-□002-M1J□

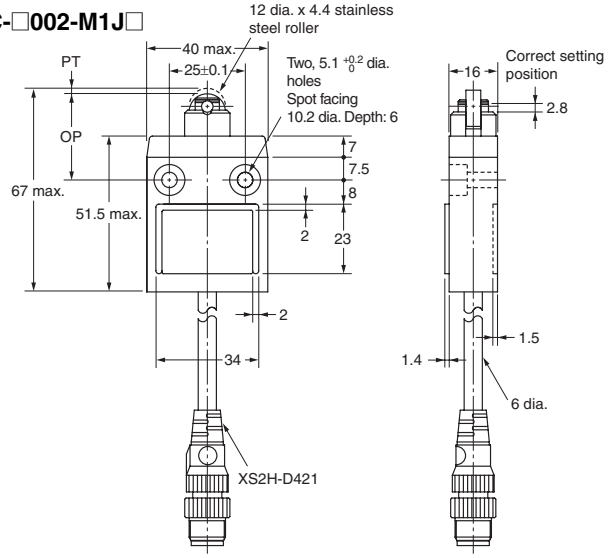

Note: Unless otherwise specified, a tolerance of ±0.4 mm applies to all dimensions.

Operating characteristics	Model		D4C-□001 -□K1EJ□	D4C-□002 -□K1EJ□
Operating force	OF	max.	11.77 N	11.77 N
Release force	RF	min.	4.41 N	4.41 N
Pretravel	PT	max.	1.8 mm	1.8 mm
Overtravel	OT	min.	3 mm	3 mm
Movement Differential	MD	max.	0.2 mm	0.2 mm
Operating Position	OP		15.7±1 mm	28.5±1 mm

Note: Specifications are the same for -M1J Switches.

Sealed Pin Plunger

D4C-□031-□K1EJ□

D4C-□031-M1J□

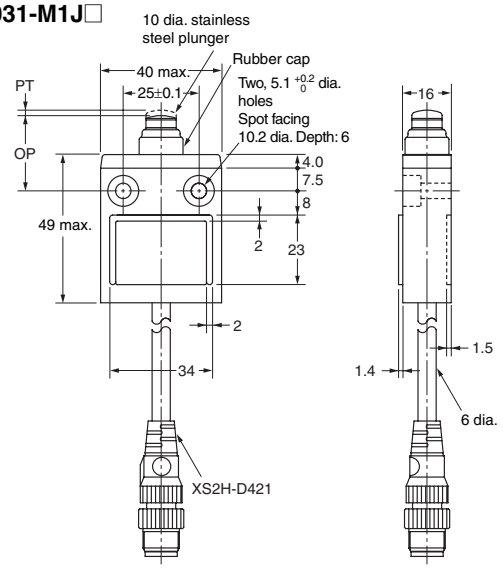

Sealed Roller Plunger

D4C-□032-□K1EJ□

D4C-□032-M1J□

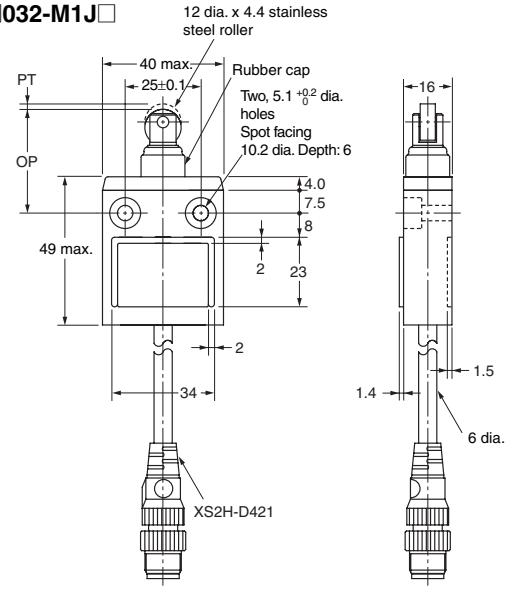

Note: Unless otherwise specified, a tolerance of ±0.4 mm applies to all dimensions.

Operating characteristics		Model	D4C-□031 -□K1EJ□	D4C-□032 -□K1EJ□
Operating force	OF	max.	17.65 N	17.65 N
Release force	RF	min.	4.41 N	4.41 N
Pretravel	PT	max.	1.8 mm	1.8 mm
Overtravel	OT	min.	3 mm	3 mm
Movement Differential	MD	max.	0.2 mm	0.2 mm
Operating Position	OP		24.9±1 mm	34.3±1 mm

Note: Specifications are the same for -M1J Switches

Roller Lever (High-sensitivity Model)

D4C-□024-□K1EJ□

D4C-□024-M1J□

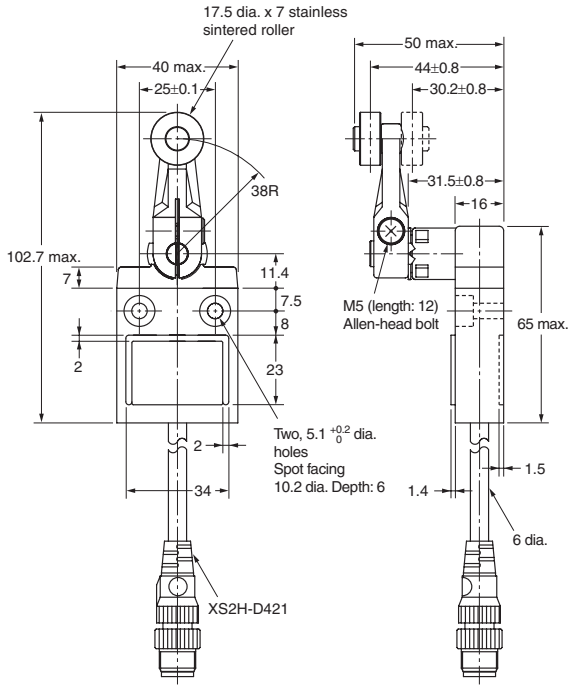

Note: Unless otherwise specified, a tolerance of ±0.4 mm applies to all dimensions.

Operating characteristics		Model	D4C-□024-□K1EJ□
Operating force	OF	max.	5.69 N
Release force	RF	min.	1.47 N
Pretravel	PT	max.	10°±3°
Overtravel	OT	min.	50°
Movement Differential	MD	max.	3°
Operating Position	OP		---

Note: Specifications are the same for -M1J Switches

Weather-resistant Models

Adjustable Roller Lever
D4C-□□27-P

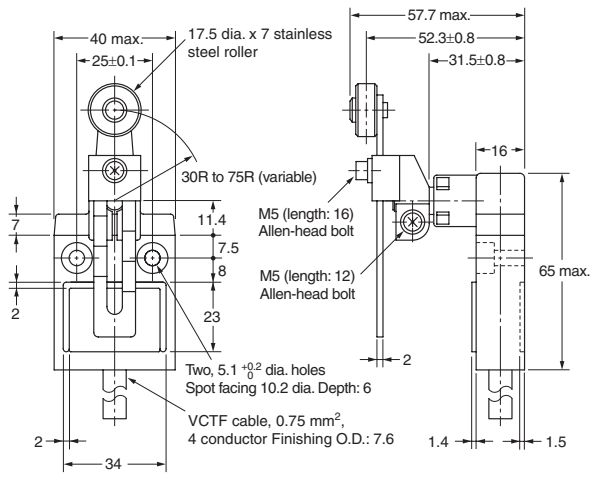

Adjustable Rod Lever
D4C-□□29-P

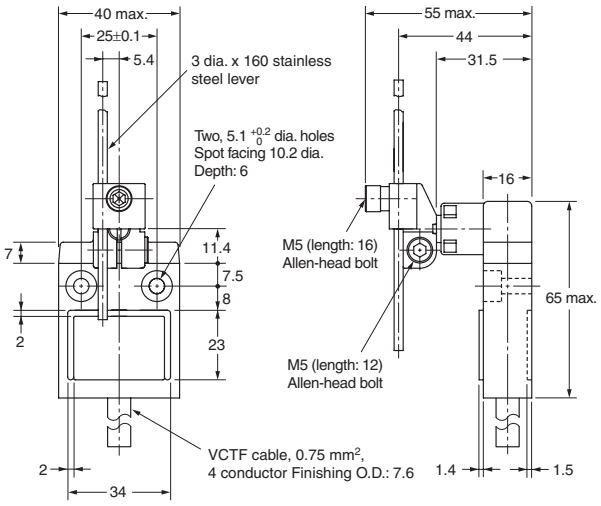

Note: Unless otherwise specified, a tolerance of ±0.4 mm applies to all dimensions.

Operating characteristics	Model		D4C-□□27-P	D4C-□□29-P *
Operating force	OF	max.	5.69 N	5.69 N
Release force	RF	min.	1.47 N	1.47 N
Pretravel	PT	max.	25°	25°
Overtravel	OT	min.	40°	40°
Movement Differential	MD	max.	3°	3°

* Operation characteristics for the D4C-□□27-P and D4C- □□29-P are for a lever length of 38 mm.

Safety Precautions

Refer to *Safety Precautions for All Limit Switches*.

Precautions for Correct Use

Operating Environment

- Seal material may deteriorate if a Switch is used outdoor or where subject to special cutting oils, solvents, or chemicals. Always appraise performance under actual application conditions and set suitable maintenance and replacement periods.
- Install Switches where they will not be directly subject to cutting chips, dust, or dirt. The Actuator and Switch must also be protected from the accumulation of cutting chips or sludge.

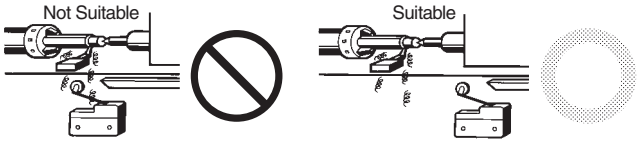

- Constantly subjecting a Switch to vibration or shock can result in wear, which can lead to contact interference with contacts, operation failure, reduced durability, and other problems. Excessive vibration or shock can lead to false contact operation or damage. Install Switches in locations not subject to shock and vibration and in orientations that will not produce resonance.
- The Switches have physical contacts. Using them in environments containing silicon gas will result in the formation of silicon oxide (SiO_2) due to arc energy. If silicon oxide accumulates on the contacts, contact interference can occur. If silicon oil, silicon filling agents, silicon cables, or other silicon products are present near the Switch, suppress arcing with contact protective circuits (surge killers) or remove the source of silicon gas.

Handling

The bottom of the Switch at the cable outlet is resin-molded. Secure the cable at a point 5 cm from the Switch bottom to prevent exertion of excess force on the cable.
When bending the cable, provide a bending radius of 45 mm min. so as not to damage the cable insulation or sheath. Excessive bending may cause fire or leakage current.

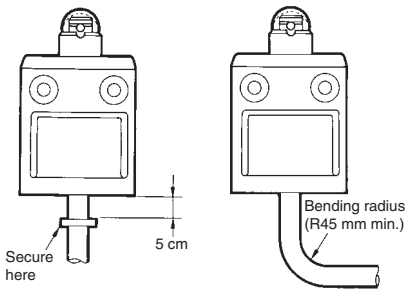

Connections

- Be sure to connect a fuse with a breaking current 1.5 to 2 times larger than the rated current to the Limit Switch in series in order to protect the Limit Switch from damage due to short-circuiting.
- When using the Limit Switch for the EN ratings, use the gI or gG 10-A fuse.

Operation

- Operation method, shapes of cam and dog, operating frequency, and overtravel have a significant effect on the service life and precision of a Limit Switch. For this reason, the dog angle must be 30° max., the surface roughness of the dog must be 6.3 S min. and hardness must be Hv 400 to 500.
- To allow the plunger-type actuator to travel properly, adjust the dog and cam to the proper setting positions. The proper position is where the plunger groove fits the bushing top.

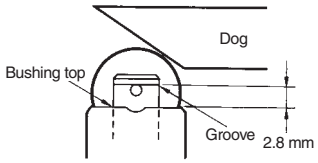

- To allow the roller lever-type actuator to travel properly, adjust the dog and cam so that the arrow head is positioned between the two convex markers as shown below.

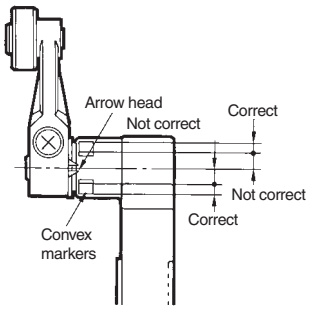

Indicator

- Indicator-equipped switch has contacts and indicator in parallel. When contacts are open, leakage current flows through the indicator circuit and may cause load's malfunction. Please check the load's OFF current before use the indicator-equipped switch.

Mounting

- A maximum of 6 Switches may be group-mounted. In this case, pay attention to the mounting direction so that the convex part of the group-mounting guide on one Switch fits into the concave part of the guide on the other Switch as shown in the figure below. For group mounting, the mounting panel must have a thickness (t) of 6 mm min.

Group Mounting

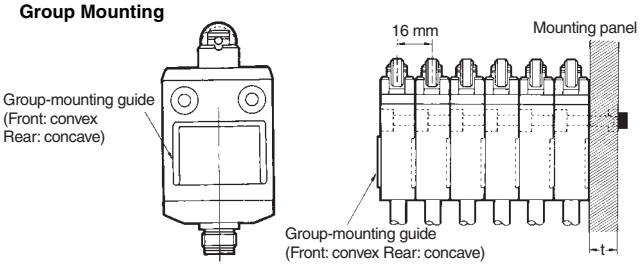

- If the mounting panel is warped or has protruding parts, a malfunction may result. Make sure that the mounting panel is not warped and has even surfaces.

Mounting Holes

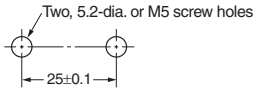

- Use a Switch with a rubber cap when using the plunger type in an environment where malfunction is possible due to environmental conditions such as dust or cutting chips which may not allow resetting.
- Do not expose the Switch to water exceeding 70°C or use it in steam.
- When the D4C is used in a circuit of a device to be exported to Europe, classified as Overvoltage Class III as specified in IEC664, provide a contact protection circuit.
- Tighten each screw to a torque according to the following table.

No.	Type	Appropriate tightening torque*
1	M5 Allen-head bolt	4.90 to 5.88 N·m
2	M3.5 head mounting screw	0.78 to 0.88 N·m
3	M5 Allen-head bolt	4.90 to 5.88 N·m

* By removing the two screws from the head, the head direction can be rotated 180°. After changing the head direction, re-tighten to the torque specified above. Be careful not to allow any foreign substance to enter the Switch.

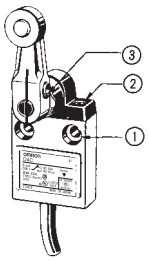

Micro-load Models (D4C-4, -5, -6)

Micro-load models can be used for switching in the range shown below.

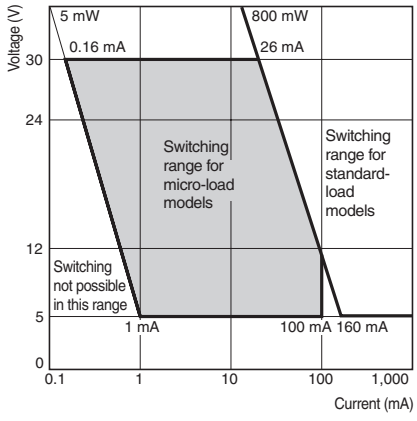

Read and Understand This Catalog

Please read and understand this catalog before purchasing the products. Please consult your OMRON representative if you have any questions or comments.

Warranty and Limitations of Liability

WARRANTY

OMRON's exclusive warranty is that the products are free from defects in materials and workmanship for a period of one year (or other period if specified) from date of sale by OMRON.

OMRON MAKES NO WARRANTY OR REPRESENTATION, EXPRESS OR IMPLIED, REGARDING NON-INFRINGEMENT, MERCHANTABILITY, OR FITNESS FOR PARTICULAR PURPOSE OF THE PRODUCTS. ANY BUYER OR USER ACKNOWLEDGES THAT THE BUYER OR USER ALONE HAS DETERMINED THAT THE PRODUCTS WILL SUITABLY MEET THE REQUIREMENTS OF THEIR INTENDED USE. OMRON DISCLAIMS ALL OTHER WARRANTIES, EXPRESS OR IMPLIED.

LIMITATIONS OF LIABILITY

OMRON SHALL NOT BE RESPONSIBLE FOR SPECIAL, INDIRECT, OR CONSEQUENTIAL DAMAGES, LOSS OF PROFITS OR COMMERCIAL LOSS IN ANY WAY CONNECTED WITH THE PRODUCTS, WHETHER SUCH CLAIM IS BASED ON CONTRACT, WARRANTY, NEGLIGENCE, OR STRICT LIABILITY.

In no event shall the responsibility of OMRON for any act exceed the individual price of the product on which liability is asserted.

IN NO EVENT SHALL OMRON BE RESPONSIBLE FOR WARRANTY, REPAIR, OR OTHER CLAIMS REGARDING THE PRODUCTS UNLESS OMRON'S ANALYSIS CONFIRMS THAT THE PRODUCTS WERE PROPERLY HANDLED, STORED, INSTALLED, AND MAINTAINED AND NOT SUBJECT TO CONTAMINATION, ABUSE, MISUSE, OR INAPPROPRIATE MODIFICATION OR REPAIR.

Application Considerations

SUITABILITY FOR USE

OMRON shall not be responsible for conformity with any standards, codes, or regulations that apply to the combination of products in the customer's application or use of the products.

At the customer's request, OMRON will provide applicable third party certification documents identifying ratings and limitations of use that apply to the products. This information by itself is not sufficient for a complete determination of the suitability of the products in combination with the end product, machine, system, or other application or use.

The following are some examples of applications for which particular attention must be given. This is not intended to be an exhaustive list of all possible uses of the products, nor is it intended to imply that the uses listed may be suitable for the products:

- Outdoor use, uses involving potential chemical contamination or electrical interference, or conditions or uses not described in this catalog.
- Nuclear energy control systems, combustion systems, railroad systems, aviation systems, medical equipment, amusement machines, vehicles, safety equipment, and installations subject to separate industry or government regulations.
- Systems, machines, and equipment that could present a risk to life or property.

Please know and observe all prohibitions of use applicable to the products.

NEVER USE THE PRODUCTS FOR AN APPLICATION INVOLVING SERIOUS RISK TO LIFE OR PROPERTY WITHOUT ENSURING THAT THE SYSTEM AS A WHOLE HAS BEEN DESIGNED TO ADDRESS THE RISKS, AND THAT THE OMRON PRODUCTS ARE PROPERLY RATED AND INSTALLED FOR THE INTENDED USE WITHIN THE OVERALL EQUIPMENT OR SYSTEM.

PROGRAMMABLE PRODUCTS

OMRON shall not be responsible for the user's programming of a programmable product, or any consequence thereof.

Disclaimers

CHANGE IN SPECIFICATIONS

Product specifications and accessories may be changed at any time based on improvements and other reasons.

It is our practice to change model numbers when published ratings or features are changed, or when significant construction changes are made. However, some specifications of the products may be changed without any notice. When in doubt, special model numbers may be assigned to fix or establish key specifications for your application on your request. Please consult with your OMRON representative at any time to confirm actual specifications of purchased products.

DIMENSIONS AND WEIGHTS

Dimensions and weights are nominal and are not to be used for manufacturing purposes, even when tolerances are shown.

PERFORMANCE DATA

Performance data given in this catalog is provided as a guide for the user in determining suitability and does not constitute a warranty. It may represent the result of OMRON's test conditions, and the users must correlate it to actual application requirements. Actual performance is subject to the OMRON Warranty and Limitations of Liability.

ERRORS AND OMISSIONS

The information in this document has been carefully checked and is believed to be accurate; however, no responsibility is assumed for clerical, typographical, or proofreading errors, or omissions.

2011.11

In the interest of product improvement, specifications are subject to change without notice.

OMRON Corporation
Industrial Automation Company

http://www.ia.omron.com/

(c)Copyright OMRON Corporation 2011 All Right Reserved.

Mouser Electronics

Authorized Distributor

Click to View Pricing, Inventory, Delivery & Lifecycle Information:

Omron:

D4C-1620 D4C-1601 D4C-1602 D4C-1732 D4C-1202 D4C-1603 D4C-1631 D4C-1632 D4C-1650 D4C-1232 D4C-0001 D4C-0002 D4C-0003 D4C-0020 D4C-0031 D4C-0032 D4C-0033 D4C-0050 D4C-0060 D4C-1102 D4C-1201 D4C-1203 D4C-1210 D4C-1220 D4C-1224 D4C-1250 D4C-1260 D4C-1301 D4C-1302 D4C-1303 D4C-1320 D4C-1324 D4C-1332 D4C-1350 D4C-1360 D4C-1402 D4C-1432 D4C-1433 D4C-1450 D4C-1501 D4C-1502 D4C-1520 D4C-1524 D4C-1602-C SD D4C-1604 D4C-1610 D4C-1620-C D4C-1620-L D4C-1620-R D4C-1624 D4C-1624-R D4C-1632-C D4C-1633 D4C-1641 D4C-1643 D4C-1652 D4C-1701 D4C-1702 D4C-1703 D4C-1720 D4C-1720-C D4C-1720-L D4C-1731 D4C-1733 D4C-1750 D4C-1802 D4C-1902 D4C-1920 D4C-2201 D4C-2202 D4C-2203 D4C-2220 D4C-2224 D4C-2232 D4C-2260 D4C-2301 D4C-2302 D4C-2320 D4C-2332 D4C-2350 D4C-2420 D4C-2460 D4C-2502 D4C-2503 D4C-2520 D4C-2602 D4C-2702 D4C-2720 D4C-3002-DK1EJ03 D4C-3002-M1J 0.3M D4C-3024-DK1EJ03 D4C-3024-M1GJ 0.5M D4C-3060-DK1EJ03 D4C-3201 D4C-3202 D4C-3202-F4 D4C-3203 D4C-3220 D4C-3224 D4C-3231