FINE LOCK AIR CYLINDER SERIES CLA Ø40~100MM

MADE IN CANADA

MADE IN USA

- High Intermediate Stopping Accuracy
- 3 Types of Locking Mechanisms
- Locks in either Extended or Retracted Direction
- 5 Bore Sizes Available
- Auto Switch Capable

TECHNICAL SPECIFICATIONS SERIES CLA

Fluid	Air
Proof Ppressure	1.5MPa / 214PSI
Max Operating Pressure	1.52MPa / 217 PSI
Min Operating Pressure	1MPa / 145 PSI
Piston Speed	50~500mm/s / 2~20in/s
Ambient and Fluid Temperature	-10 ~ 60°C / 14~140°F
Cushion	Yes
Thread tolerance	JIS 2 class
Stroke tolerance	~200 : $^{+1.0}_{0}$, 250~1000 : $^{+1.4}_{0}$, 1001~1500 : $^{+1.}$
Mounting	Basic, Foot, Front flange, rear flange, Single clevis, rear trunnion.

*Maximum Piston Speed at which locking is possible is limited by the Maximum Allowable Kinetic Energy.

TECHNICAL SPECIFICATIONS STANDARD STROKE

Bore Size (mm)	Standard Stroke (mm)
40	25, 50, 75, 100, 125, 150, 175, 200, 250, 300, 350, 400, 450, 500
50	25, 50, 75, 100, 125, 150, 175, 200, 250, 300, 350, 400, 450, 500, 600
63	25, 50, 75, 100, 125, 150, 175, 200, 250, 300, 350, 400, 450, 500, 600
80	25, 50, 75, 100, 125, 150, 175, 200, 250, 300, 350, 400, 450, 500, 600, 700
100	25, 50, 75, 100, 125, 150, 175, 200, 250, 300, 350, 400, 450, 500, 600, 700

HOW TO ORDER SERIES CLA

C ○ LA ○ N ○ — ○ ○ — ○ ○ ○ — ○

MAGNET
- ……Without
D ……For Autoswitches

MOUNTING
B ……Basic
L ……Foot
F ……Front flange
G ……Rear flange
C ……Single clevis (rear)
D ……Double clevis (rear)
T ……Centre trunnion

BORE
40, 50, 63, 80, 100

STROKE
See Standard Stroke Specification Table

SUFFIX SYMBOL
J ……Nylon Gaiter (Rod Boot)
K ……Neoprene Gaiter (Rod Boot)
- ……Both Ends (With Cushion)
N ……No Cushioning
R ……Front Cushion only
H ……Rear Cushion only

LOCK UP TYPE
E ……Spring lock
D ……Spring and air lock up
P ……Air lock up

APPLICABLE AUTO SWITCH
Refer to Auto Switch Accessories Section

NUMBER OF SWITCHES
- ……2 Pieces
S ……1 Piece
n ……n Pieces

PORT THREADS
- …… PT Port
X1US .. NPT Port Imperial Thread
XC18 ...NPT Port Only

DIMENSIONS SEE NEXT PAGE ☞

Courtesy of Steven Engineering, Inc. • 230 Ryan Way, South San Francisco, CA 94080-6370 • Main Office: (650) 588-9200 • Outside Local Area: (800) 258-9200 • www.stevenengineering.com

TECHNICAL SPECIFICATIONS
FINELOCK TYPE (CONSTRUCTION) SERIES CLA

Construction

Spring lock-up

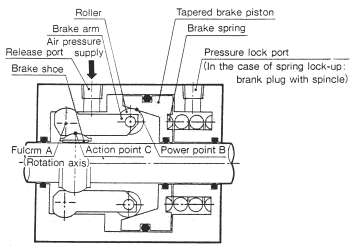

Lock releasing

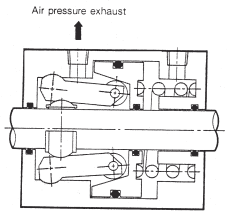

Locking

Spring force applied tapered brake piston is enlarged by the wedge effect and even more strengthened to $\frac{AB}{AC}$ times by the effect of lever, works on the brake shoe, then turns into a large power which tightens the piston rod to lock it.
To release lock up, apply air pressure to releasing port to kill the spring force.

Air pressure lock-up

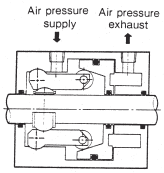

Lock releasing

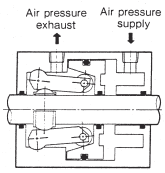

Locking

Air pressure drives the brake piston.

Spring and air pressure lock-up

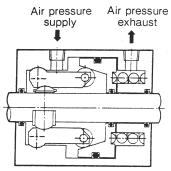

Lock releasing

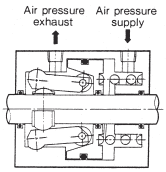

Locking

Air pressure and spring force combine to drive brake piston.

DIMENSIONS
BASIC TYPE CLAB

WITH ROD BOOT

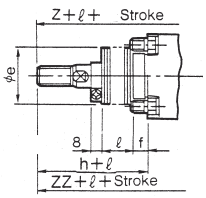

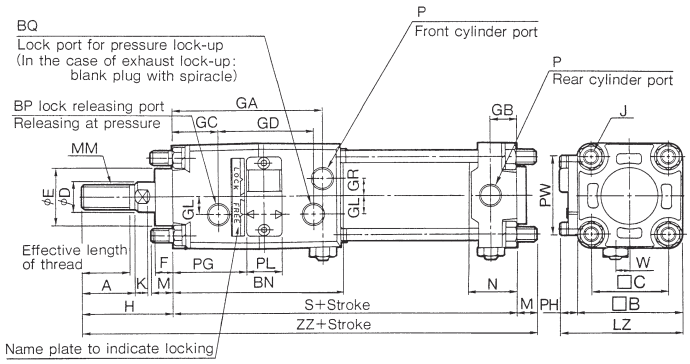

Bore Size	Stroke Range W/O Boot	Stroke Range W/Boot	Effective Length Of Thread	A	□B	BN	BP	BQ	□C	øD	øE	F	GA	GB	GC	GD	GL	GR	J	K	LZ	M	MM	MM X1US
40	~500	20~500	27	30	60	96	1/4	1/4	44	16	32	10	85	15	26	54	10	10	M8x1.25	6	71	11	M14x1.5	7/16-20
50	~600	20~600	32	35	70	108	1/4	1/4	52	20	40	10	95	17	27	59	13	12	M8x1.25	7	80	11	M18x1.5	3/4-16
63	~600	20~600	32	35	86	115	1/4	1/4	64	20	40	10	102	17	26	67	18	15	M10x1.25	7	99	14	M18x1.5	3/4-16
80	~750	20~750	37	40	102	129	1/4	1/4	78	25	52	14	113	21	30	72	23	17	M12x1.75	11	117	17	M22x1.5	3/4-16
100	~750	20~750	37	40	116	140	1/4	1/4	92	30	52	14	124	21	31	76	25	19	M12x1.75	11	131	17	M26x1.5	1-14

Bore Size	N	P	PG	PH	PL	PW	S	W	Without Boot H	Without Boot ZZ	With Boot øe	With Boot f	With Boot h	With Boot ℓ	With Boot ZZ
40	27	1/4	42	11	20	45	153	8	51	215	43	11.2	59		223
50	30	3/8	46	10	21	50	168	0	58	237	52	11.2	66	1/4	245
63	31	3/8	48.5	13	23	60	182	0	58	254	52	11.2	66	Stroke	262
80	37	1/2	55	15	23	70	208	0	71	296	65	12.5	80		305
100	40	1/2	56.5	15	25	80	226	0	72	315	65	14	81		324

SEE INSIDE FRONT COVER FOR DETAILS OF YOUR LOCAL SALES OFFICE

Courtesy of Steven Engineering, Inc. • 230 Ryan Way, South San Francisco, CA 94080-6370 • Main Office: (650) 588-9200 • Outside Local Area: (800) 258-9200 • www.stevenengineering.com

FOR FURTHER TECHNICAL DETAILS ON THIS PRODUCT REQUEST CATALOG REFERENCE E214 & N361

DIMENSIONS
DOUBLE CLEVIS TYPE CLAD

WITH ROD BOOT

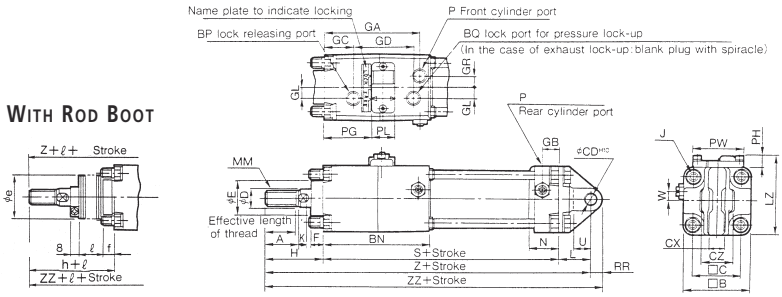

Bore Size	Stroke Range W/O Boot	Stroke Range W/Boot	Effective Length Of Thread	A	❒B	BN	BP	BQ	❒C	øD	øE	F	GA	GB	GC	GD	GL	GR	J	K	L	LZ	MM	MM X1US
40	~500	20~500	27	30	60	96	1/4	1/4	44	16	32	10	85	15	26	54	10	10	M8x1.25	6	30	71	M14x1.5	7/16-20
50	~600	20~600	32	35	70	108	1/4	1/4	52	20	40	10	95	17	27	59	13	12	M8x1.25	7	30	80	M18x1.5	3/4-16
63	~600	20~600	32	35	86	115	1/4	1/4	64	20	40	10	102	17	26	67	18	15	M10x1.25	7	40	99	M18x1.5	3/4-16
80	~750	20~750	37	40	102	129	1/4	1/4	78	25	52	14	113	21	30	72	23	17	M12x1.75	11	48	117	M22x1.5	3/4-16
100	~750	20~750	37	40	116	140	1/4	1/4	92	30	52	14	124	21	31	76	25	19	M12x1.75	11	50	131	M26x1.5	1-14

Bore Size	N	P	PG	PH	PL	PW	RR	S	U	W	øCD^{H10}	Without Boot H	Z	ZZ	With Boot øe	f	h	ℓ	Z	ZZ
40	27	1/4	42	11	20	45	10	153	16	8	$10^{0-0.058}$	51	234	244	43	11.2	59		242	252
50	30	3/8	46	10	21	50	12	168	19	0	$10^{0-0.070}$	58	261	273	52	11.2	66	1/4	269	281
63	31	3/8	48.5	13	23	60	16	182	23	0	$16^{0-0.070}$	58	280	296	52	11.2	66	Stroke	288	304
80	37	1/2	55	15	23	70	20	208	28	0	$20^{0-0.084}$	71	327	347	65	12.5	80		336	356
100	40	1/2	56.5	15	25	80	25	226	36	0	$25^{0-0.084}$	72	356	281	65	14	81		365	390

DIMENSIONS
TRUNNION TYPE CLAT

WITH ROD BOOT

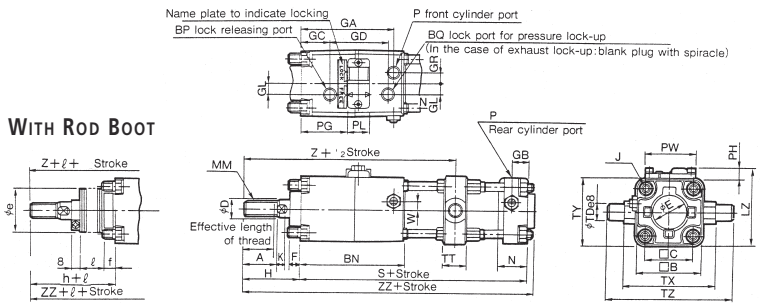

Bore Size	Stroke Range W/O Boot	Stroke Range W/Boot	Effective Length Of Thread	A	❒B	BN	BP	BQ	❒C	øD	øE	F	GA	GB	GC	GD	GL	GR	J	K	LZ	MM	MM X1US
40	~500	20~500	27	30	60	96	1/4	1/4	44	16	32	10	85	15	26	54	10	10	M8x1.25	6	71	M14x1.5	7/16-20
50	~600	20~600	32	35	70	108	1/4	1/4	52	20	40	10	95	17	27	59	13	12	M8x1.25	7	80	M18x1.5	3/4-16
63	~600	20~600	32	35	86	115	1/4	1/4	64	20	40	10	102	17	26	67	18	15	M10x1.25	7	99	M18x1.5	3/4-16
80	~750	20~750	37	40	102	129	1/4	1/4	78	25	52	14	113	21	30	72	23	17	M12x1.75	11	117	M22x1.5	3/4-16
100	~750	20~750	37	40	116	140	1/4	1/4	92	30	52	14	124	21	31	76	25	19	M12x1.75	11	131	M26x1.5	1-14

Bore Size	N	P	PG	PH	PL	PW	S	W	øTDe8	TT	TX	TY	TZ	Without Boot H	Z	ZZ	With Boot øe	f	h	ℓ	Z	ZZ
40	27	1/4	42	11	20	45	153	8	$15^{0.059-0.032}$	22	85	62	117	51	162	209	43	11.2	59		170	217
50	30	3/8	46	10	21	50	168	0	$15^{0.059-0.032}$	22	95	74	127	58	181	232	52	11.2	66	1/4	189	240
63	31	3/8	48.5	13	23	60	182	0	$18^{0.059-0.032}$	28	110	90	148	58	191	248	52	11.2	66	Stroke	199	256
80	37	1/2	55	15	23	70	208	0	$25^{0.073-0.04}$	34	149	110	192	71	221	286	65	12.5	80		230	295
100	40	1/2	56.5	15	25	80	226	0	$25^{0.073-0.04}$	40	162	130	214	72	235	306	65	14	81		244	315

Courtesy of Steven Engineering, Inc. • 230 Ryan Way, South San Francisco, CA 94080-6370 • Main Office: (650) 588-9200 • Outside Local Area: (800) 258-9200 • www.stevenengineering.com

DIMENSIONS
REAR FLANGE TYPE CLAG

WITH ROD BOOT

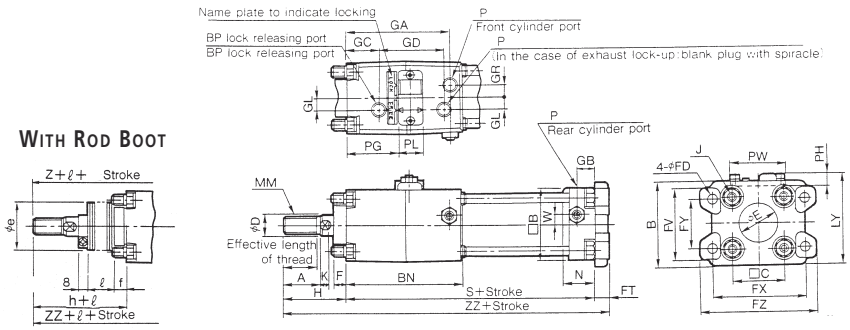

Bore Size	Stroke Range W/O Boot	Stroke Range W/Boot	Effective Length Of Thread	A	B	□B	BN	BP	BQ	□C	øD	øE	F	GA	GB	GC	GD	GL	GR	J	K	LY	MM	MM X1US
40	~500	20~500	27	30	70	60	96	1/4	1/4	44	16	32	10	85	15	26	54	10	10	M8x1.25	6	76.5	M14x1.5	7/16-20
50	~600	20~600	32	35	81	70	108	1/4	1/4	52	20	40	10	95	17	27	59	13	12	M8x1.25	7	85.5	M18x1.5	3/4-16
63	~600	20~600	32	35	101	86	115	1/4	1/4	64	20	40	10	102	17	26	67	18	15	M10x1.25	7	106.5	M18x1.5	3/4-16
80	~750	20~750	37	40	119	102	129	1/4	1/4	78	25	52	14	113	21	30	72	23	17	M12x1.75	11	125.5	M22x1.5	3/4-16
100	~750	20~750	37	40	133	116	140	1/4	1/4	92	30	52	14	124	21	31	76	25	19	M12x1.75	11	139.5	M26x1.5	1-14

Bore Size	N	P	PG	PH	PL	PW	S	W	FV	øFD	FT	FX	FY	FZ	Without Boot H	Without Boot ZZ	With Boot øe	With Boot f	With Boot h	With Boot ℓ	With Boot ZZ
40	27	1/4	42	11	20	45	153	8	60	9	12	80	42	100	51	216	43	11.2	59		224
50	30	3/8	46	10	21	50	168	0	70	9	12	90	50	110	58	238	52	11.2	66	1/4	246
63	31	3/8	48.5	13	23	60	182	0	86	11.5	15	105	59	130	58	255	52	11.2	66	Stroke	263
80	37	1/2	55	15	23	70	208	0	102	13.5	18	130	76	160	71	297	65	12.5	80		306
100	40	1/2	56.5	15	25	80	226	0	116	13.5	18	150	92	180	72	316	65	14	81		325

DIMENSIONS
SINGLE CLEVIS TYPE CLAC

WITH ROD BOOT

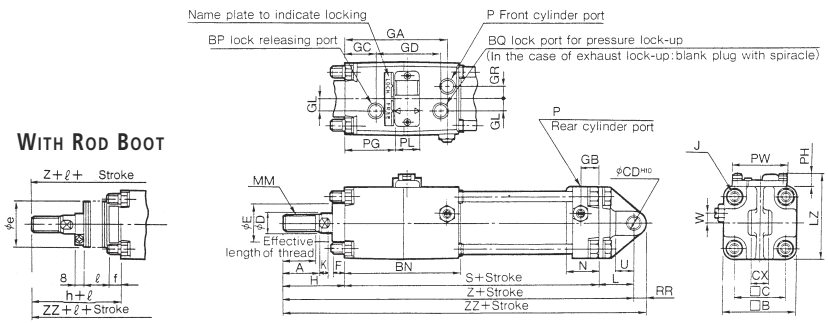

Bore Size	Stroke Range W/O Boot	Stroke Range W/Boot	Effective Length Of Thread	A	□B	BN	BP	BQ	□C	øD	øE	F	GA	GB	GC	GD	GL	GR	J	K	L	LZ	MM	MM X1US
40	~500	20~500	27	30	60	96	1/4	1/4	44	16	32	10	85	15	26	54	10	10	M8x1.25	6	30	71	M14x1.5	7/16-20
50	~600	20~600	32	35	70	108	1/4	1/4	52	20	40	10	95	17	27	59	13	12	M8x1.25	7	30	80	M18x1.5	3/4-16
63	~600	20~600	32	35	86	115	1/4	1/4	64	20	40	10	102	17	26	67	18	15	M10x1.25	7	40	99	M18x1.5	3/4-16
80	~750	20~750	37	40	102	129	1/4	1/4	78	25	52	14	113	21	30	72	23	17	M12x1.75	11	48	117	M22x1.5	3/4-16
100	~750	20~750	37	40	116	140	1/4	1/4	92	30	52	14	124	21	31	76	25	19	M12x1.75	11	58	131	M26x1.5	1-14

Bore Size	N	P	PG	PH	PL	PW	RR	S	U	W	øCD H10	CX	Without Boot H	Without Boot Z	Without Boot ZZ	With Boot øe	With Boot f	With Boot h	With Boot ℓ	With Boot Z	With Boot ZZ
40	27	1/4	42	11	20	45	10	153	16	8	$10^{0-0.058}$	$15^{-0.3-\ -0.1}$	51	234	244	43	11.2	59		242	252
50	30	3/8	46	10	21	50	12	168	19	0	$10^{0-0.07}$	$18^{-0.3-\ -0.1}$	58	261	273	52	11.2	66	1/4	269	281
63	31	3/8	48.5	13	23	60	16	182	23	0	$16^{0-0.07}$	$25^{-0.3-\ -0.1}$	58	280	296	52	11.2	66	Stroke	288	304
80	37	1/2	55	15	23	70	20	208	28	0	$20^{0-0.084}$	$31.5^{-0.3-\ -0.1}$	71	327	347	65	12.5	80		336	356
100	40	1/2	56.5	15	25	80	25	226	36	0	$25^{0-0.084}$	$35.5^{-0.3-\ -0.1}$	72	356	381	65	14	81		365	390

SEE INSIDE FRONT COVER FOR
DETAILS OF YOUR LOCAL SALES OFFICE

Courtesy of Steven Engineering, Inc. • 230 Ryan Way, South San Francisco, CA 94080-6370 • Main Office: (650) 588-9200 • Outside Local Area: (800) 258-9200 • www.stevenengineering.com

FOR FURTHER TECHNICAL DETAILS ON THIS PRODUCT REQUEST CATALOG REFERENCE E214 & N361

DIMENSIONS
FRONT FLANGE TYPE CLAF

with Rod Boot

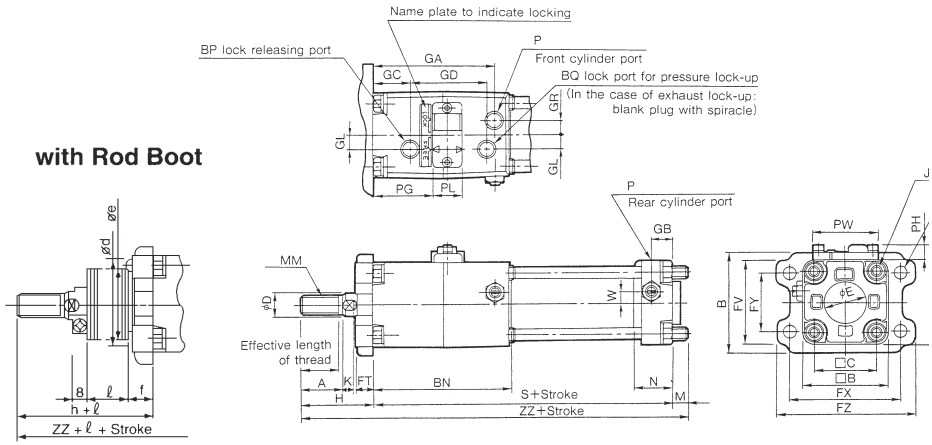

Bore Size	Stroke Range W/O Boot	Stroke Range W/Boot	Effective Length Of Thread	A	B	□B	BN	BP	BQ	□C	øD	øE	GA	GB	GC	GD	GL	GR	J	K	LZ	M	MM	MM X1US
40	~800	20~800	27	30	71	60	96	1/4	1/4	44	16	32	85	15	26	54	10	10	M8x1.25	6	71	11	M14x1.5	7/16-20
50	~1000	20~1000	32	35	81	70	108	1/4	1/4	52	20	40	95	17	27	59	13	12	M8x1.25	7	80	11	M18x1.5	3/4-16
63	~1000	20~1000	32	35	101	86	115	1/4	1/4	64	20	40	102	17	26	67	18	15	M10x1.25	7	99	14	M18x1.5	3/4-16
80	~1000	20~1000	37	40	119	102	129	1/4	1/4	78	25	52	113	21	30	72	23	17	M12x1.75	11	117	17	M22x1.5	3/4-16
100	~1000	20~1000	37	40	133	116	140	1/4	1/4	92	30	52	124	21	31	76	25	19	M12x1.75	11	131	17	M26x1.5	1-14

Bore Size	N	P	PG	PH	PL	PW	S	W	FV	øFD	FT	FX	FY	FZ	Without Boot H	Without Boot ZZ	With Boot øe	With Boot ød	With Boot f	With Boot h	With Boot ℓ	With Boot ZZ
40	27	1/4	42	11	20	45	153	8	60	9	12	80	42	100	51	215	43	52	15	59		223
50	30	3/8	46	10	21	50	168	0	70	9	12	90	50	110	58	237	52	58	15	66	1/4	245
63	31	3/8	48.5	13	23	60	182	0	86	11.5	15	105	59	130	58	254	52	58	17.5	66	Strok	262
80	37	1/2	55	15	23	70	208	0	102	13.5	18	130	76	160	71	296	65	80	21.5	80	e	305
100	40	1/2	56.5	15	25	80	226	0	116	13.5	18	150	92	180	72	315	65	80	21.5	81		324

DIMENSIONS
LONG STROKE FRONT FLANGE TYPE CLAF

with Rod Boot

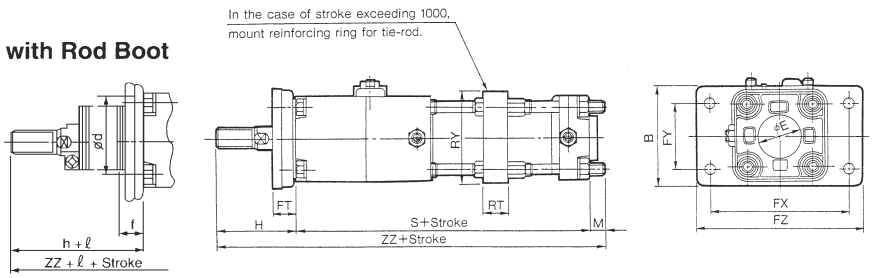

Bore Size	Stroke Range mm	B	M	RT	RY	FT	FX	FY	FZ	Without Boot H	Without Boot ZZ	With Boot f	With Boot ZZ
50	1001~1200	88	6	30	76	20	120	58	144	67	241	19	240
63	1001~1200	105	10	40	92	23	140	64	170	71	263	19	258
80	1001~1400	124	12	45	112	28	164	84	198	87	307	21	300
100	1001~1500	140	12	50	136	29	180	100	220	89	327	21	319

Courtesy of Steven Engineering, Inc. • 230 Ryan Way, South San Francisco, CA 94080-6370 • Main Office: (650) 588-9200 • Outside Local Area: (800) 258-9200 • www.stevenengineering.com

DIMENSIONS
FOOT TYPE CLAL

with Rod Boot

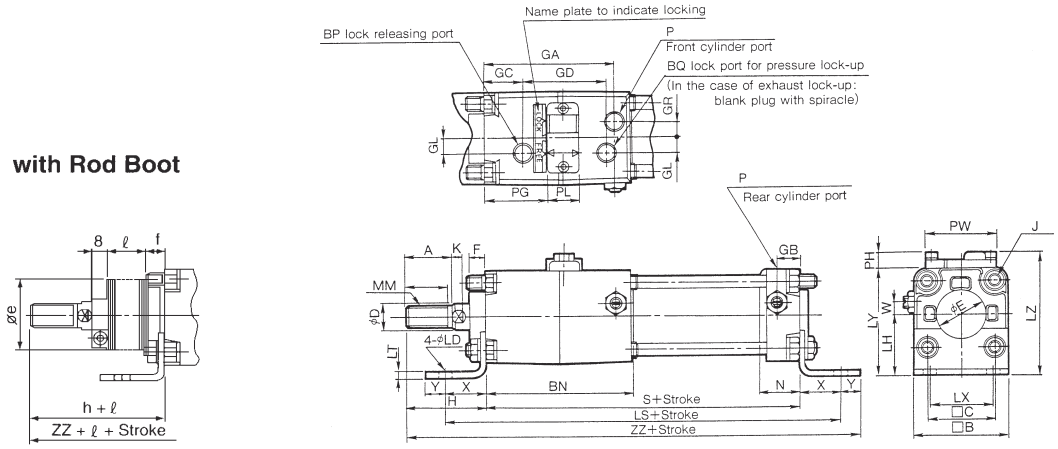

DIMENSIONS
LONG STROKE FOOT TYPE CLAL

Long stroke
(ϕ50～ϕ100)

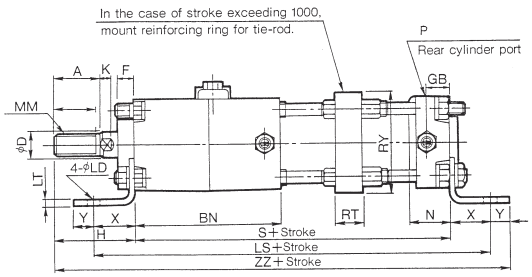

Bore Size	Stroke Range W/O Boot	Stroke Range W/Boot	Effective Length Of Thread	A	B	□B	BN	BP	BQ	□C	øD	øE	F	GA	GB	GC	GD	GL	GR	J	K	MM	MM X1US
40	~500	20~500	27	30	70	60	96	1/4	1/4	44	16	32	10	85	15	26	54	10	10	M8x1.25	6	M14x1.5	7/16-20
50	~600	20~600	32	35	81	70	108	1/4	1/4	52	20	40	10	95	17	27	59	13	12	M8x1.25	7	M18x1.5	3/4-16
63	~600	20~600	32	35	101	86	115	1/4	1/4	64	20	40	10	102	17	26	67	18	15	M10x1.25	7	M18x1.5	3/4-16
80	~750	20~750	37	40	119	102	129	1/4	1/4	78	25	52	14	113	21	30	72	23	17	M12x1.75	11	M22x1.5	3/4-16
100	~750	20~750	37	40	133	116	140	1/4	1/4	92	30	52	14	124	21	31	76	25	19	M12x1.75	11	M26x1.5	1-14

Bore Size	N	P	PG	PH	PL	PW	S	W	X	Y	øLD	LH	LS	LT	LX	LY	LZ	Without Boot H	Without Boot ZZ	With Boot øe	With Boot f	With Boot h	With Boot ℓ	With Boot ZZ
40	27	1/4	42	11	20	45	153	8	27	13	9	40	207	3.2	42	70	81	51	244	43	11.2	59		252
50	30	3/8	46	10	21	50	168	0	27	13	9	45	222	3.2	50	80	90	58	266	52	11.2	66	1/4	274
63	31	3/8	48.5	13	23	60	182	0	34	16	11.5	50	250	3.2	59	93	106	58	290	52	11.2	66	Strok	298
80	37	1/2	55	15	23	70	208	0	44	16	11.5	65	296	4.5	76	116	131	71	339	65	12.5	80	e	348
100	40	1/2	56.5	15	25	80	226	0	43	17	13.5	75	312	6	92	133	148	72	358	65	14	81		367

DIMENSIONS
LONG STROKE FOOT TYPE CLAL

Bore Size	Stroke Range mm	RT	RY
40	501~800	-	-
50	601~1000	-	-
	1001~1200	30	76
63	601~1000	-	-
	1001~1200	40	92
80	751~1000	-	-
	1001~1400	45	112
100	751~1000	-	-
	1001~1500	50	136

ACCESSORIES
MOUNTING BRACKETS SERIES CLA

Bore Size	40	50	63	80	100
Foot *	CA1-L04	CA1-L05	CA1-L06	CA1-L08	CA1-L10
Flange	CA1-F04	CA1-F05	CA1-F06	CA1-F08	CA1-F10
Single Clevis	CA1-C04	CA1-C05	CA1-C06	CA1-C08	CA1-C10
Double Clevis	CA1-D04	CA1-D05	CA1-D06	CA1-D08	CA1-D10

ACCESSORIES
AUTO SWITCH BANDS

Note: Pre-wired Switches with 3/4 Pin Connectors available, please consult SMC Customer Service

Switch Model		Part No	Applicable Bore Size
D-A5 / A6	D-F5 / J5	BT-04	40 / 50
		BT-06	63
		BT-08	80 / 100
D-B5 / B6	D-G5 / K5	BA-04	40
		BA-05	50
		BA-06	63
		BA-08	80
		BA-10	100
D-A3		BA3-040	40
		BA3-050	50
		DA3-063	63
		DA3-080	80
		DA3-100	100

SEE INSIDE FRONT COVER FOR DETAILS OF YOUR LOCAL SALES OFFICE

Courtesy of Steven Engineering, Inc. • 230 Ryan Way, South San Francisco, CA 94080-6370 • Main Office: (650) 588-9200 • Outside Local Area: (800) 258-9200 • www.stevenengineering.com

FOR FURTHER TECHNICAL DETAILS ON THIS PRODUCT REQUEST CATALOG REFERENCE E214 & N361

ACCESSORIES
MOUNTING TYPE SERIES CLA

Note: Pre-wired Switches with 3/4 Pin Connectors available, please consult SMC Customer Service

Model		Type	Load Voltage	Max Load Current or Load Current Range	Internal Voltage	Indicator Lamp
Mounting Type						
Band	Tie Rod					
-	D-A56	Reed	4~8 VDC	20mA	0,8V or less	ON: Red LED
D-B53	D-A53	Reed	24VDC	5~50mA	2.4V or less	ON: Red LED
D-B54	D-A54	Reed	24VDC, 100VAC, 200VAC	5~50mA, 5~25mA, 5~12.5mA	2.4V or less	ON: Red LED
-	D-A67	Reed	Max 24 VAC	30mA	-	None
D-B64	D-A64	Reed	24VAC/DC, 100VAC, 200VAC	50mA, 25mA, 12.5mA	-	None
D-A33	D-A33C	Reed	24 VDC	5~50mA	2.4V or less	ON: Red LED
D-A34	D-A34C	Reed	24VDC, 100VDC, 200VDC	5~50mA, 5~25mA, 5~12.5mA	2.4V or less	ON: Red LED
D-A44	D-A44C	Reed	24VDC, 100VDC, 200VDC	5~50mA, 5~25mA, 5~12.5mA	4V or less	ON: Red LED
D-B59W	D-A59W	Reed	24VDC	5~40mA	0.8V or less	ON: Red LED; Green: Best Position
D-G59	D-F59	3 Wire NPN	28 VDC	10mA	0.8V or less	ON: Red LED
D-G5P	D-F5P	3 Wire PNP	-	80mA	14V or less	ON: Red LED
-	D-J51	2 Wire	80~260 VAC	5~80mA	3V or less	ON: Red LED
D-K59	D-J59	2 Wire	10~28 VDC	5~40mA	0.8V or less	ON: Red LED
D-G39	D-G39C	3 Wire	28VDC	40mA	3V or less	ON: Red LED
D-K39	D-K39C	2 Wire	10~28 VDC	5~40mA	2V or less	ON: Red LED; Green: Best Position
D-G59W	D-J59W	3 Wire NPN	28 VDC	40mA	4V or less	ON: Red LED; Green: Best Position
D-G5PW	D-F5PW	3 Wire PNP	-	80mA	4V or less	ON: Red LED; Green: Best Position
D-G5BAL	D-F5BAL	2 Wire	10~28 VDC	5~40mA	4V or less	ON: Red LED; Green: Best Position
D-G5NTL	D-F5NTL	3 Wire NPN	28 VDC or less	80mA	2V or less	ON: Red LED
D-G59F	D-F59F	4 Wire NPN	28 VDC	40mA	0.8V or less	ON: Red LED; Green: Best Position
-	D-F5LF	4 Wire NPN	26 VDC	40mA	0.8V or less	ON: Red LED; Green: Best Position

ACCESSORIES
KNUCKLE JOINTS

I Type Single Knuckle Joint

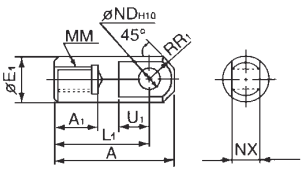

Material: Free Cutting Sulfer Steel

Part No	Bore Size mm	A	A_1	$øE_1$	L_1	MM	R_1	U_1	$øND^{H10}$	NX
I-04	40	69	22	24	55	M14x1.5	15.5	20	$12^{0\sim0.070}$	$16^{-0.3\sim-0.1}$
I-05	50 / 63	74	27	28	60	M18x1.5	15.5	20	$12^{0\sim0.070}$	$16^{-0.3\sim-0.1}$
I-08	80	91	37	36	71	M22x1.5	22.5	26	$18^{0\sim0.070}$	$28^{-0.3\sim-0.1}$
I-10	100	106	37	40	83	M26x1.5	24.5	26	$20^{0\sim0.084}$	$30^{-0.3\sim-0.1}$

Y Type Double Knuckle Joint

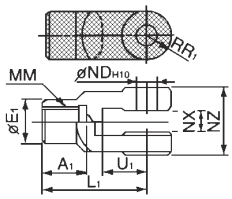

Material: Cast Iron

Part No	Bore Size mm	A	$øE_1$	L_1	MM	R_1	U_1	$øND^{H10}$	NX	NZ
Y-04d	40	22	24	55	M14x1.5	13	25	$12^{0\sim0.070}$	$16^{-0.3\sim-0.1}$	38
Y-05d	50 / 63	27	28	60	M18x1.5	15	27	$12^{0\sim0.070}$	$16^{-0.3\sim-0.1}$	38
Y-08d	80	37	36	71	M22x1.5	19	28	$18^{0\sim0.070}$	$28^{-0.3\sim-0.1}$	55
Y-10d	100	37	40	83	M26x1.5	21	38	$20^{0\sim0.084}$	$30^{-0.3\sim-0.1}$	61

I Type Single Knuckle Joint

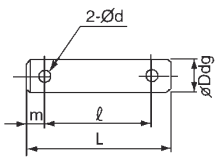

Material: Carbon Steel

Part No	Bore Size mm		$øND^{H10}$	L	ℓ	m	ød Through Hole Diameter	Applicable Split Pin
	Clevis	Knuckle						
CDP-2A	40	-	$10^{-0.076\sim-0.046}$	46	38	4	3	ø3x18ℓ
CDP-3A	50	40/50/63	$12^{-0.093\sim-0.05}$	55.5	47.5	4	3	ø3x18ℓ
CDP-4A	63	-	$16^{-0.093\sim-0.05}$	71	61	5	4	ø4x25ℓ
CDP-5A	-	80	$18^{-0.093\sim-0.05}$	76.5	66.5	5	4	ø4x25ℓ
CDP-6A	80	100	$20^{-0.117\sim-0.065}$	83	73	5	4	ø4x25ℓ
CDP-7A	100	-	$25^{-0.117\sim-0.065}$	88	78	6	4	ø4x36ℓ

Y Type Double Knuckle Joint

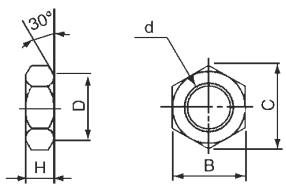

Material: Rolled Steel

Part No	Bore Size mm	d	H	B	C	D
NT-04	40	M14x1.5	8	22	25.4	21
NT-05	50 / 63	M18x1.5	11	27	31.2	26
NT-08	80	M22x1.5	13	32	37	31
NT-10	100	M26x1.5	16	41	47.3	39

Courtesy of Steven Engineering, Inc. • 230 Ryan Way, South San Francisco, CA 94080-6370 • Main Office: (650) 588-9200 • Outside Local Area: (800) 258-9200 • www.stevenengineering.com