High Speed Optocoupler, Single and Dual, 10 MBd

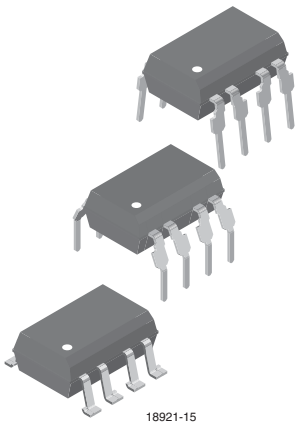

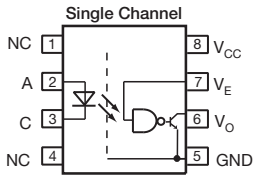

SFH6741, SFH6742

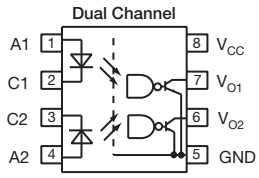

SFH6750, SFH6752

FEATURES

- Choice of CMR performance of 10 kV/µs, 5 kV/µs, and 100 V/µs
- High speed: 10 MBd typical
- + 5 V CMOS compatibility
- Pure tin leads
- Guaranteed AC and DC performance over temperature: - 40 °C to + 100 °C temperature range
- Meets IEC 60068-2-42 (SO_2) and IEC 60068-2-43 (H_2S) requirements
- Low input current capability: 5 mA
- Compliant to RoHS Directive to 2002/95/EC and in accordance WEEE 2002/96/EC

Pb-free

e3

RoHS COMPLIANT

APPLICATIONS

- Microprocessor system interface
- PLC, ATE input/output isolation
- Computer peripheral interface
- Digital fieldbus isolation: CC-link, DeviceNet, profibus, SDS
- High speed A/D and D/A conversion
- AC plasma display panel level shifting
- Multiplexed data transmission
- Digital control power supply
- Ground loop elimination

AGENCY APPROVALS

- UL1577, file no. E52744 system code H, double protection
- cUL - file no. E52744, equivalent to CSA bulletin 5A
- DIN EN 60747-5-2 (VDE 0884)/ VDE available with option 1
- Reinforced insulation rating per IEC60950 2.10.5.1

DESCRIPTION

The SFH674x and SFH675x are single channel 10 MBd optocouplers utilizing a high efficient input LED coupled with an integrated optical photodiode IC detector. The detector has an open drain NMOS-transistor output, providing less leakage compared to an open collector Schottky clamped transistor output. For the single channel type, an enable function on pin 7 allows the detector to be strobed. The internal shield provides a guaranteed common mode transient immunity of 5 kV/µs for the SFH6741 and 10 kV/µs for the SFH6742 and SFH6752.

ORDERING INFORMATION

S	F	H	6	7	#	#	-	X	0	0	#	T

PART NUMBER — PACKAGE OPTION — TAPE AND REEL

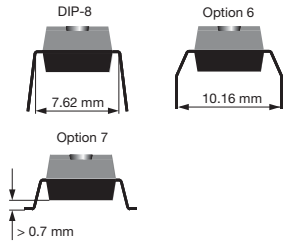

AGENCY CERTIFIED/PACKAGE	SINGLE CHANNEL		DUAL CHANNEL	
	CMR (kV/µs)		CMR (kV/µs)	
BSI, UL, cUL	**5**	**10**	**0.1**	**10**
DIP-8	-	-	-	-
DIP-8, 400 mil, option 6	-	SFH6742-X006	SFH6750-X006	-
SMD-8, option 7	SFH6741-X007T	-	-	SFH6752-X007T

Note

- For additional information on the available options refer to Option Information.

This document is subject to change without notice.
THE PRODUCTS DESCRIBED HEREIN AND THIS DOCUMENT ARE SUBJECT TO SPECIFIC DISCLAIMERS, SET FORTH AT www.vishay.com/doc?91000

TRUTH TABLE (positive logic)		
LED	**ENABLE**	**OUTPUT**
On	H	L
Off	H	H
On	L	H
Off	L	H
On	NC	L
Off	NC	H

ABSOLUTE MAXIMUM RATINGS (T_{amb} = 25 °C, unless otherwise specified)				
PARAMETER	**TEST CONDITION**	**SYMBOL**	**VALUE**	**UNIT**
INPUT				
Average forward current (single channel)		I_F	20	mA
Average forward current (per channel for dual channel)		I_F	15	mA
Reverse input voltage		V_R	5	V
Enable input voltage (single channel)		V_E	V_{CC} + 0.5 V	V
Enable input current (single channel)		I_E	5	mA
Surge current	t = 100 µs	I_{FSM}	200	mA
OUTPUT				
Supply voltage		V_{CC}	7	V
Output current		I_O	50	mA
Output voltage		V_O	7	V
Output power dissipation (single channel)		P_{diss}	85	mW
Output power dissipation per channel (dual channel)		P_{diss}	60	mW
COUPLER				
Storage temperature		T_{stg}	- 55 to + 150	°C
Operating temperature		T_{amb}	- 40 to + 100	°C
Lead solder temperature (single channel)	for 10 s		260	°C
Solder reflow temperature (1)	for 1 min		260	°C
Isolation test voltage	t = 1 s	V_{ISO}	5300	V_{RMS}

Notes

- Stresses in excess of the absolute maximum ratings can cause permanent damage to the device. Functional operation of the device is not implied at these or any other conditions in excess of those given in the operational sections of this document. Exposure to absolute maximum ratings for extended periods of the time can adversely affect reliability.

(1) Refer to reflow profile for soldering conditions for surface mounted devices (SMD). Refer to wave profile for soldering conditions for through hole devices (DIP).

RECOMMENDED OPERATING CONDITIONS					
PARAMETER	**TEST CONDITION**	**SYMBOL**	**MIN.**	**MAX.**	**UNIT**
Operating temperature		T_{amb}	- 40	100	°C
Supply voltage		V_{CC}	4.5	5.5	V
Input current low level		I_{FL}	0	250	µA
Input current high level		I_{FH}	5	15	mA
Logic high enable voltage		V_{EH}	2	V_{CC}	V
Logic low enable voltage		V_{EL}	0	0.8	V
Output pull up resistor		R_L	330	4K	Ω
Fanout	R_L = 1 kΩ	N		5	-

This document is subject to change without notice.
THE PRODUCTS DESCRIBED HEREIN AND THIS DOCUMENT ARE SUBJECT TO SPECIFIC DISCLAIMERS, SET FORTH AT www.vishay.com/doc?91000

ELECTRICAL CHARACTERISTICS						
PARAMETER	**TEST CONDITION**	**SYMBOL**	**MIN.**	**TYP.**	**MAX.**	**UNIT**
INPUT						
Input forward voltage	I_F = 10 mA	V_F	1	1.4	1.7	V
Reverse current	V_R = 5 V	I_R		0.01	10	µA
Input capacitance	f = 1 MHz, V_F = 0 V	C_I		55		pF
OUTPUT						
High level supply current (single channel)	V_E = 0.5 V, I_F = 0 mA	I_{CCH}		4.1	7	mA
	V_E = V_{CC}, I_F = 0 mA	I_{CCH}		3.3	6	mA
High level supply current (dual channel)	I_F = 0 mA	I_{CCH}		6.9	12	mA
Low level supply current (single channel)	V_E = 0.5 V, I_F = 10 mA	I_{CCL}		4	7	mA
	V_E = V_{CC}, I_F = 10 mA	I_{CCL}		3.3	6	mA
Low level supply current (dual channel)	I_F = 10 mA	I_{CCL}		6.5	12	mA
High level output current	V_E = 2 V, V_O = 5.5 V, I_F = 250 µA	I_{OH}		0.002	1	µA
Low level output voltage	V_E = 2 V, I_F = 5 mA, I_{OL} (sinking) = 13 mA	V_{OL}		0.2	0.6	V
Input threshold current	V_E = 2 V, V_O = 5.5 V, I_{OL} (sinking) = 13 mA	I_{TH}		2.4	5	mA
High level enable current	V_E = 2 V	I_{EH}		- 0.6	- 1.6	mA
Low level enable current	V_E = 0.5 V	I_{EL}		- 0.8	- 1.6	mA
High level enable voltage		V_{EH}	2			V
Low level enable voltage		V_{EL}			0.8	V

Note

- Minimum and maximum values are testing requirements. Typical values are characteristics of the device and are the result of engineering evaluation. Typical values are for information only and are not part of the testing requirements.
  All typicals at T_{amb} = 25 °C, V_{CC} = 5.5 V, unless otherwise specified.

SWITCHING CHARACTERISTICS						
PARAMETER	**TEST CONDITION**	**SYMBOL**	**MIN.**	**TYP.**	**MAX.**	**UNIT**
Propagation delay time to high output level	R_L = 350 Ω, C_L = 15 pF	t_{PLH}	20	48	100	ns
Propagation delay time to low output level	R_L = 350 Ω, C_L = 15 pF	t_{PHL}	25	50	100	ns
Pulse width disortion	R_L = 350 Ω, C_L = 15 pF	$\lvert t_{PHL} - t_{PLH} \rvert$		2.9	35	ns
Propagation delay skew	R_L = 350 Ω, C_L = 15 pF	t_{PSK}		8	40	ns
Output rise time (10 % to 90 %)	R_L = 350 Ω, C_L = 15 pF	t_r		23		ns
Output fall time (90 % to 10 %)	R_L = 350 Ω, C_L = 15 pF	t_f		7		ns
Propagation delay time of enable from V_{EH} to V_{EL}	R_L = 350 Ω, C_L = 15 pF, V_{EL} = 0 V, V_{EH} = 3 V	t_{ELH}		12		ns
Propagation delay time of enable from V_{EL} to V_{EH}	R_L = 350 Ω, C_L = 15 pF, V_{EL} = 0 V, V_{EH} = 3 V	t_{EHL}		11		ns

Note

- Over recommended temperature (T_{amb} = - 40 °C to + 100 °C), V_{CC} = 5 V, I_F = 7.5 mA unless otherwise specified.
  All typicals at T_{amb} = 25 °C, V_{CC} = 5 V.

This document is subject to change without notice.
THE PRODUCTS DESCRIBED HEREIN AND THIS DOCUMENT ARE SUBJECT TO SPECIFIC DISCLAIMERS, SET FORTH AT www.vishay.com/doc?91000

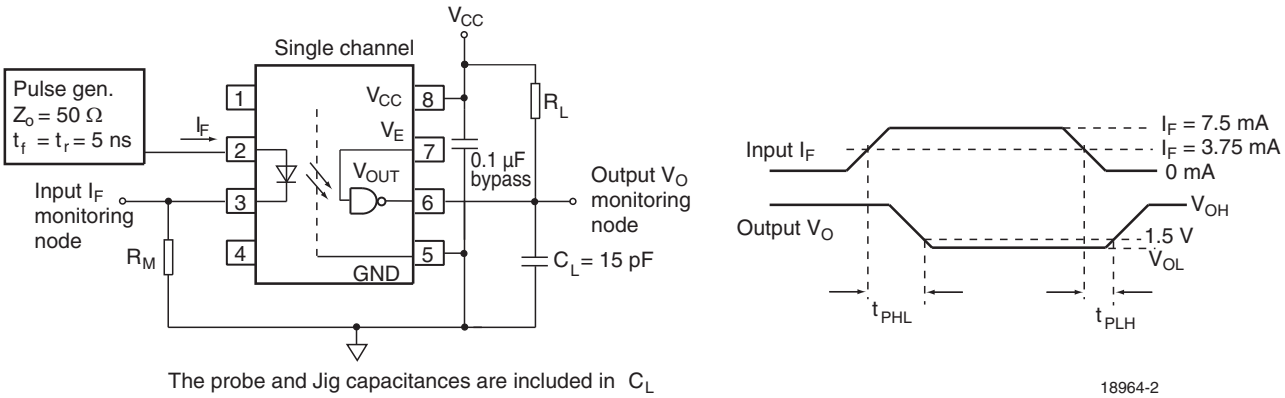

Fig. 1 - Single Channel Test Circuit for t_{PLH}, t_{PHL}, t_r and t_f

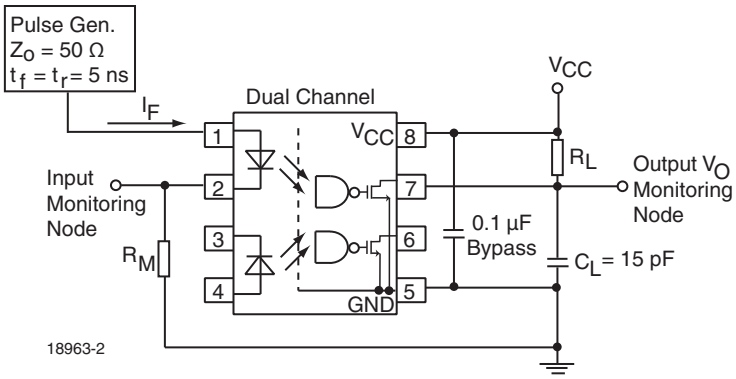

Fig. 2 - Dual Channel Test Circuit for t_{PLH}, t_{PHL}, t_r and t_f

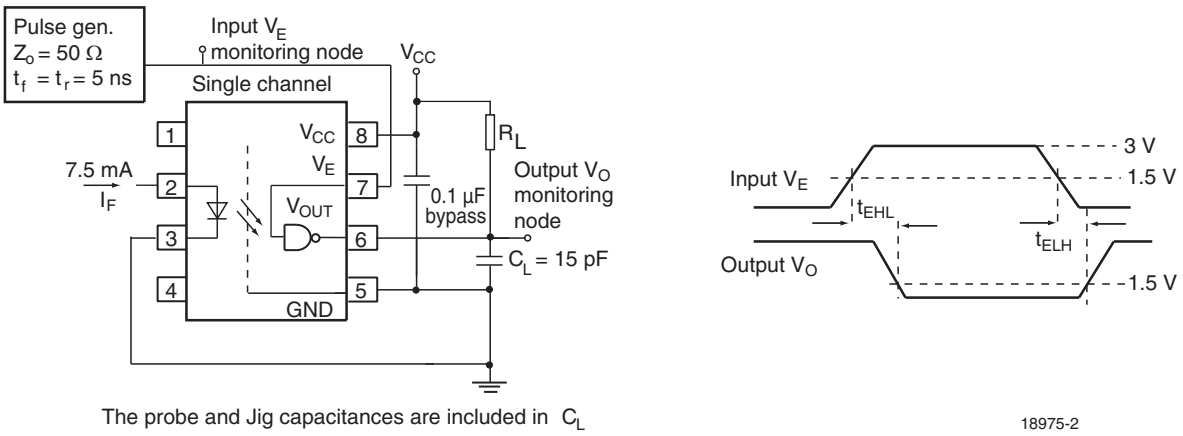

Fig. 3 - Single Channel Test Circuit for t_{EHL}, and t_{ELH}

This document is subject to change without notice.
THE PRODUCTS DESCRIBED HEREIN AND THIS DOCUMENT ARE SUBJECT TO SPECIFIC DISCLAIMERS, SET FORTH AT www.vishay.com/doc?91000

COMMON MODE TRANSIENT IMMUNITY						
PARAMETER	TEST CONDITION	SYMBOL	MIN.	TYP.	MAX.	UNIT
Common mode transient immunity (high)	$\lvert V_{CM}\rvert$ = 10 V, V_{CC} = 5 V, I_F = 0 mA, $V_{O(min.)}$ = 2 V, R_L = 350 Ω, T_{amb} = 25 °C (1)	$\lvert CM_H\rvert$	100			V/µs
	$\lvert V_{CM}\rvert$ = 50 V, V_{CC} = 5 V, I_F = 0 mA, $V_{O(min.)}$ = 2 V, R_L = 350 Ω, T_{amb} = 25 °C (2)	$\lvert CM_H\rvert$	5000	10 000		V/µs
	$\lvert V_{CM}\rvert$ = 1 kV, V_{CC} = 5 V, I_F = 0 mA, $V_{O(min.)}$ = 2 V, R_L = 350 Ω, T_{amb} = 25 °C (3)	$\lvert CM_H\rvert$	10 000	15 000		V/µs
	$\lvert V_{CM}\rvert$ = 10 V, V_{CC} = 5 V, I_F = 7.5 mA, $V_{O(max.)}$ = 0.8 V, R_L = 350 Ω, T_{amb} = 25 °C (1)	$\lvert CM_L\rvert$	100			V/µs
	$\lvert V_{CM}\rvert$ = 50 V, V_{CC} = 5 V, I_F = 7.5 mA, $V_{O(max.)}$ = 0.8 V, R_L = 350 Ω, T_{amb} = 25 °C (2)	$\lvert CM_L\rvert$	5000	10 000		V/µs
	$\lvert V_{CM}\rvert$ = 1 kV, V_{CC} = 5 V, I_F = 7.5 mA, $V_{O(max.)}$ = 0.8 V, R_L = 350 Ω, T_{amb} = 25 °C (3)	$\lvert CM_L\rvert$	10 000	15 000		V/µs

Notes
(1) For SFH6750
(2) For SFH6741
(3) For SFH6742 and SFH6752

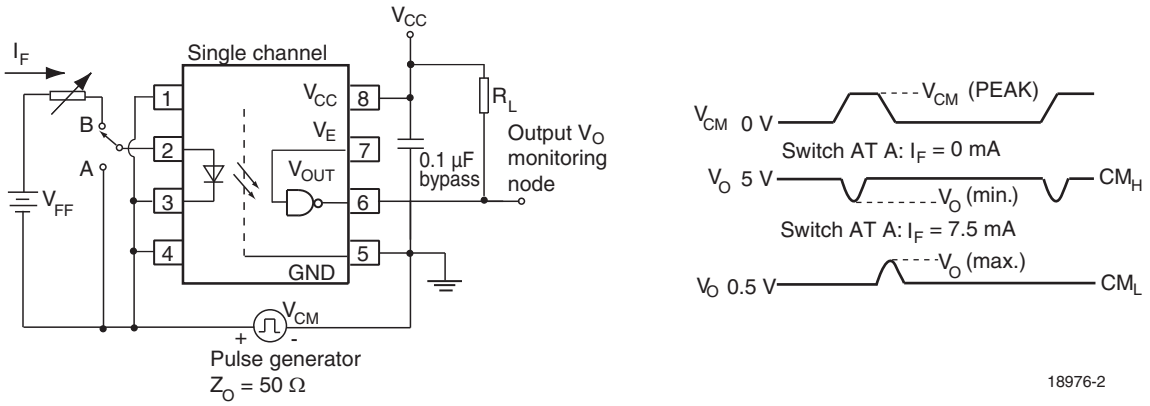

Fig. 4 - Single Channel Test Circuit for Common Mode Transient Immunity

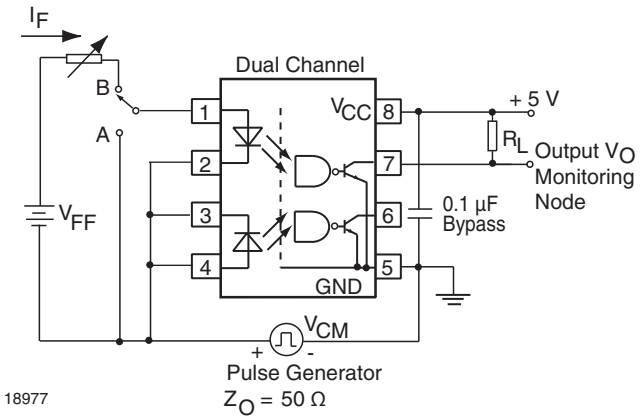

Fig. 5 - Dual Channel Test Circuit for Common Mode Transient Immunity

This document is subject to change without notice.
THE PRODUCTS DESCRIBED HEREIN AND THIS DOCUMENT ARE SUBJECT TO SPECIFIC DISCLAIMERS, SET FORTH AT www.vishay.com/doc?91000

SAFETY AND INSULATION RATINGS						
PARAMETER	TEST CONDITION	SYMBOL	MIN.	TYP.	MAX.	UNIT
Climatic classification	according to IEC 69 part 1			55/110/21		
Comparative tracking index		CTI	175		399	
Peak transient overvoltage		V_{IOTM}	8000			V
Peak insulation voltage		V_{IORM}	630			V
Safety rating - power output		P_{SO}			500	mW
Safety rating - input current		I_{SI}			300	mA
Safety rating - temperature		T_{SI}			175	°C
Creepage distance	Standard DIP-8		7			mm
Clearance distance	Standard DIP-8		7			mm
Creepage distance	400 mil DIP-8		8			mm
Clearance distance	400 mil DIP-8		8			mm
Insulation thickness, reinforced rated	per IEC60950.2.10.5.1		0.2			mm

Note

- As per IEC 60747-5-2, §7.4.3.8.1, this optocoupler is suitable for “safe electrical insulation” only within the safety ratings. Compliance with the safety ratings shall be ensured by means of prodective circuits.

TYPICAL CHARACTERISTICS (T_{amb} = 25 °C, unless otherwise specified)

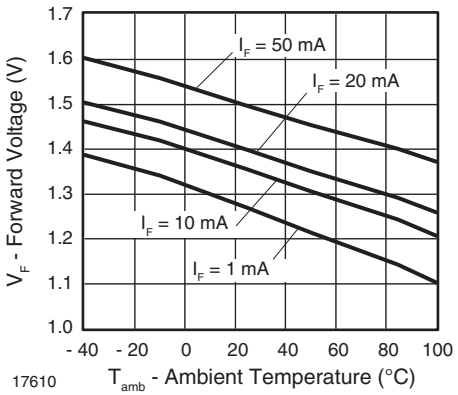

Fig. 6 - Forward Voltage vs. Ambient Temperature

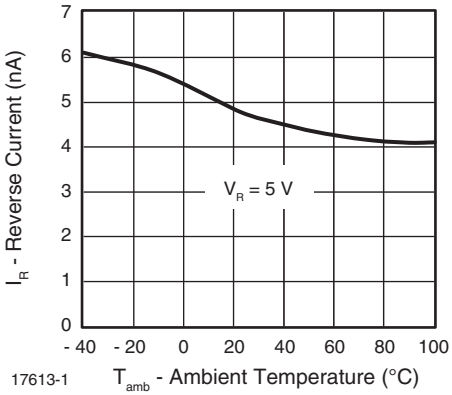

Fig. 8 - Reverse Current vs. Ambient Temperature

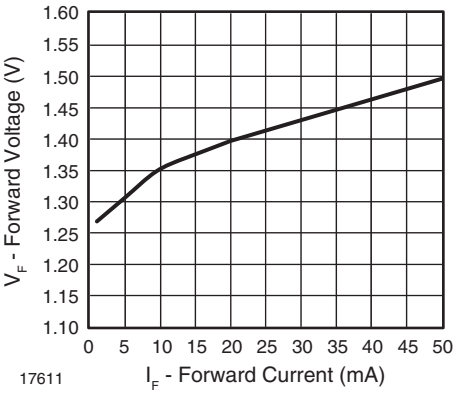

Fig. 7 - Forward Voltage vs. Forward Current

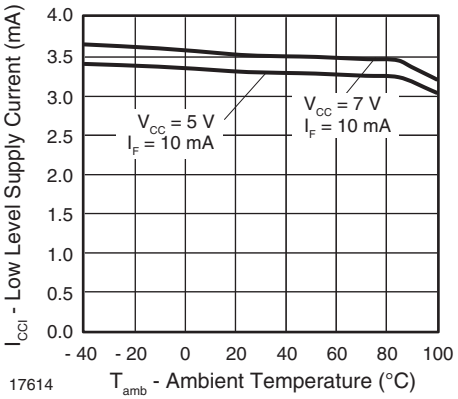

Fig. 9 - Low Level Supply Current vs. Ambient Temperature

This document is subject to change without notice.
THE PRODUCTS DESCRIBED HEREIN AND THIS DOCUMENT ARE SUBJECT TO SPECIFIC DISCLAIMERS, SET FORTH AT www.vishay.com/doc?91000

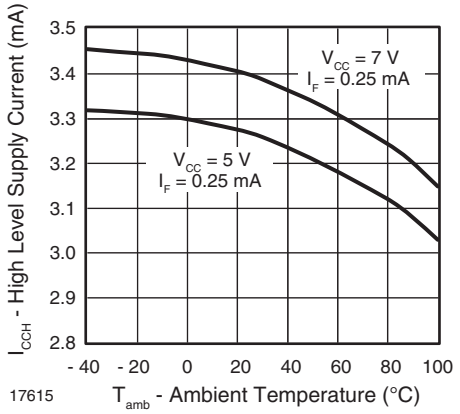

Fig. 10 - High Level Supply Current vs. Ambient Temperature

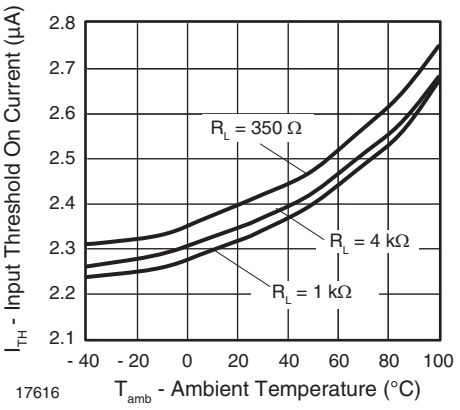

Fig. 11 - Input Threshold On Current vs. Ambient Temperature

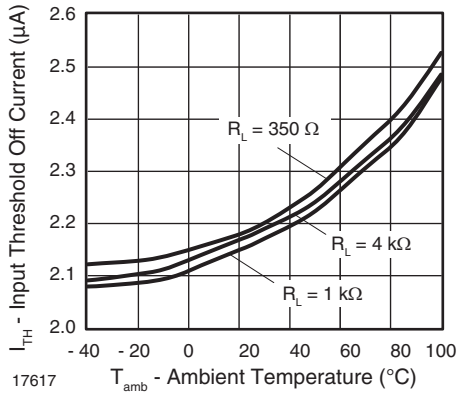

Fig. 12 - Input Threshold Off Current vs. Ambient Temperature

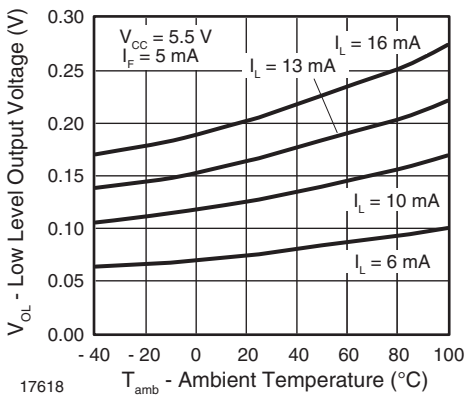

Fig. 13 - Low Level Output Voltage vs. Ambient Temperature

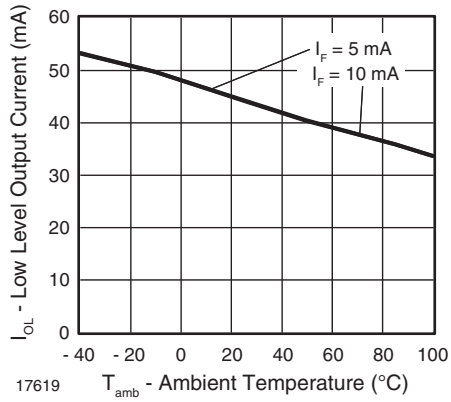

Fig. 14 - Low Level Output Current vs. Ambient Temperature

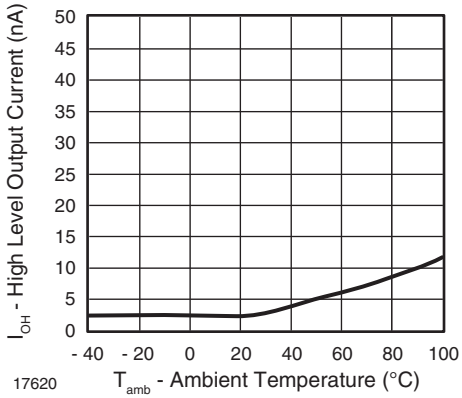

Fig. 15 - High Level Output Current vs. Ambient Temperature

This document is subject to change without notice.
THE PRODUCTS DESCRIBED HEREIN AND THIS DOCUMENT ARE SUBJECT TO SPECIFIC DISCLAIMERS, SET FORTH AT www.vishay.com/doc?91000

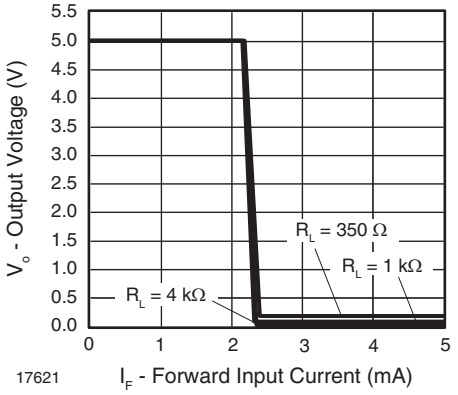

Fig. 16 - Output Voltage vs. Forward Input Current

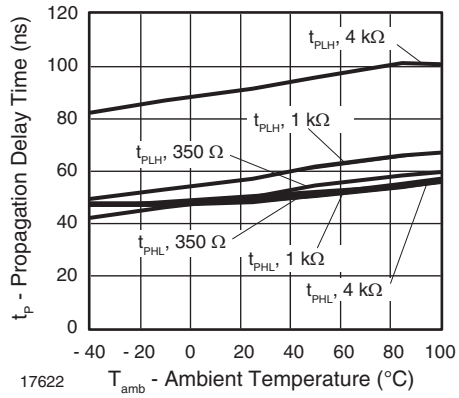

Fig. 17 - Propagation Delay vs. Ambient Temperature

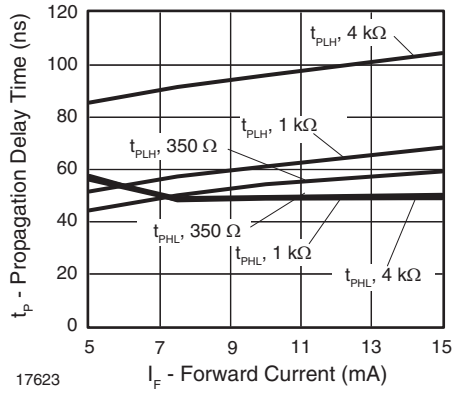

Fig. 18 - Propagation Delay vs. Forward Current

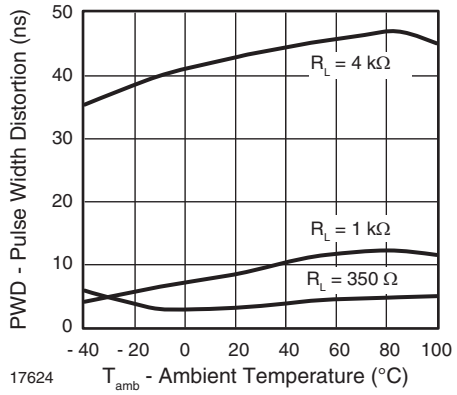

Fig. 19 - Pulse Width Distortion vs. Ambient Temperature

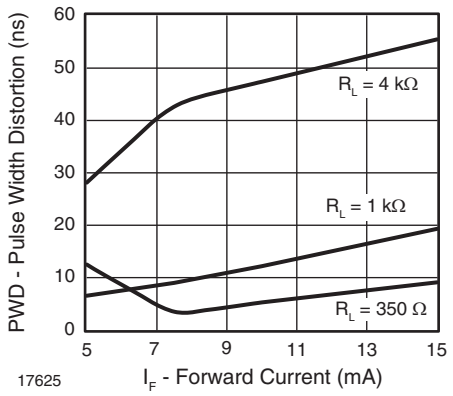

Fig. 20 - Pulse Width Distortion vs. Forward Current

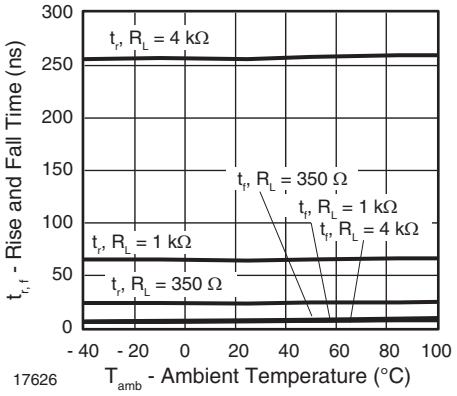

Fig. 21 - Rise and Fall Time vs. Ambient Temperature

This document is subject to change without notice.
THE PRODUCTS DESCRIBED HEREIN AND THIS DOCUMENT ARE SUBJECT TO SPECIFIC DISCLAIMERS, SET FORTH AT www.vishay.com/doc?91000

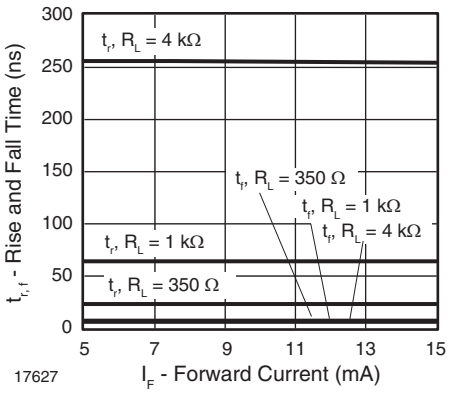

Fig. 22 - Rise and Fall Time vs. Forward Current

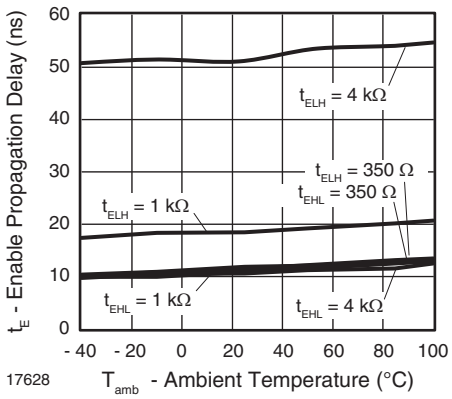

Fig. 23 - Enable Propagation Delay vs. Ambient Temperature

PACKAGE DIMENSIONS in millimeters

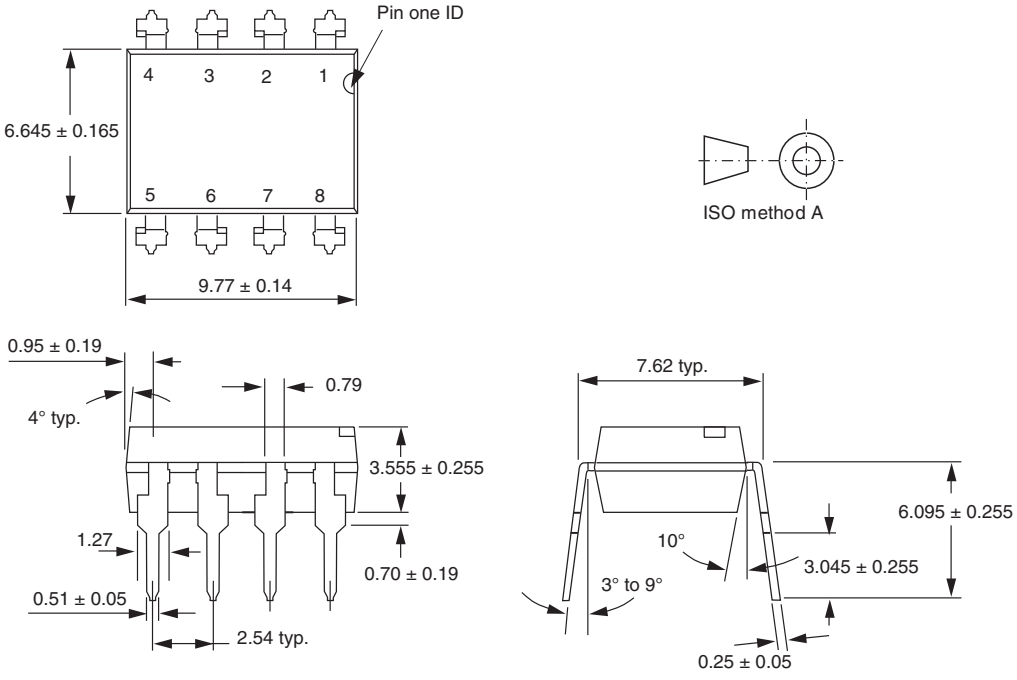

This document is subject to change without notice.
THE PRODUCTS DESCRIBED HEREIN AND THIS DOCUMENT ARE SUBJECT TO SPECIFIC DISCLAIMERS, SET FORTH AT www.vishay.com/doc?91000

PACKAGE DIMENSIONS in millimeters

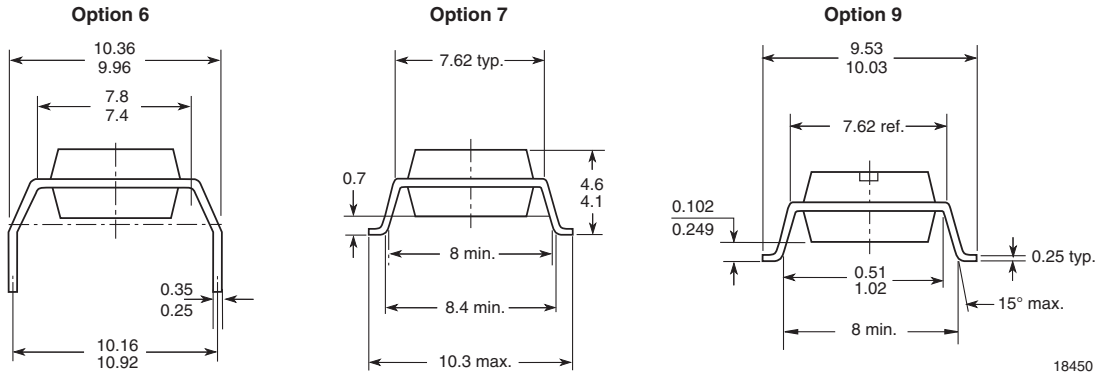

PACKAGE MARKING (for example)

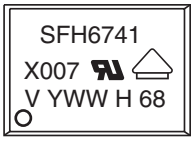

Notes

- Option 1 and VDE logos are only marked on option 1 parts.
- Tape and reel suffix (T) is not part of the package marking.

This document is subject to change without notice.
THE PRODUCTS DESCRIBED HEREIN AND THIS DOCUMENT ARE SUBJECT TO SPECIFIC DISCLAIMERS, SET FORTH AT www.vishay.com/doc?91000

Disclaimer

ALL PRODUCT, PRODUCT SPECIFICATIONS AND DATA ARE SUBJECT TO CHANGE WITHOUT NOTICE TO IMPROVE RELIABILITY, FUNCTION OR DESIGN OR OTHERWISE.

Vishay Intertechnology, Inc., its affiliates, agents, and employees, and all persons acting on its or their behalf (collectively, "Vishay"), disclaim any and all liability for any errors, inaccuracies or incompleteness contained in any datasheet or in any other disclosure relating to any product.

Vishay makes no warranty, representation or guarantee regarding the suitability of the products for any particular purpose or the continuing production of any product. To the maximum extent permitted by applicable law, Vishay disclaims (i) any and all liability arising out of the application or use of any product, (ii) any and all liability, including without limitation special, consequential or incidental damages, and (iii) any and all implied warranties, including warranties of fitness for particular purpose, non-infringement and merchantability.

Statements regarding the suitability of products for certain types of applications are based on Vishay's knowledge of typical requirements that are often placed on Vishay products in generic applications. Such statements are not binding statements about the suitability of products for a particular application. It is the customer's responsibility to validate that a particular product with the properties described in the product specification is suitable for use in a particular application. Parameters provided in datasheets and/or specifications may vary in different applications and performance may vary over time. All operating parameters, including typical parameters, must be validated for each customer application by the customer's technical experts. Product specifications do not expand or otherwise modify Vishay's terms and conditions of purchase, including but not limited to the warranty expressed therein.

Except as expressly indicated in writing, Vishay products are not designed for use in medical, life-saving, or life-sustaining applications or for any other application in which the failure of the Vishay product could result in personal injury or death. Customers using or selling Vishay products not expressly indicated for use in such applications do so at their own risk. Please contact authorized Vishay personnel to obtain written terms and conditions regarding products designed for such applications.

No license, express or implied, by estoppel or otherwise, to any intellectual property rights is granted by this document or by any conduct of Vishay. Product names and markings noted herein may be trademarks of their respective owners.

Material Category Policy

Vishay Intertechnology, Inc. hereby certifies that all its products that are identified as RoHS-Compliant fulfill the definitions and restrictions defined under Directive 2011/65/EU of The European Parliament and of the Council of June 8, 2011 on the restriction of the use of certain hazardous substances in electrical and electronic equipment (EEE) - recast, unless otherwise specified as non-compliant.

Please note that some Vishay documentation may still make reference to RoHS Directive 2002/95/EC. We confirm that all the products identified as being compliant to Directive 2002/95/EC conform to Directive 2011/65/EU.

Vishay Intertechnology, Inc. hereby certifies that all its products that are identified as Halogen-Free follow Halogen-Free requirements as per JEDEC JS709A standards. Please note that some Vishay documentation may still make reference to the IEC 61249-2-21 definition. We confirm that all the products identified as being compliant to IEC 61249-2-21 conform to JEDEC JS709A standards.

Mouser Electronics

Authorized Distributor

Click to View Pricing, Inventory, Delivery & Lifecycle Information:

Vishay:
SFH6752-X007T SFH6741 SFH6741-X006 SFH6741-X007T SFH6741-X017T SFH6742 SFH6742-X006 SFH6742-X007T SFH6750 SFH6750-X006 SFH6750-X007T SFH6752 SFH6752-X006