BULT118

High voltage fast-switching NPN power transistor

Features

- High voltage capability
- Minimum lot-to-lot spread for reliable operation
- Very high switching speed

Applications

- Electronic ballast for fluorescent lighting
- Flyback and forward single transistor low power converters

Description

The device is manufactured using high voltage multi-epitaxial planar technology for high switching speeds and medium voltage capability.

It uses a cellular emitter structure with planar edge termination to enhance switching speeds while maintaining the wide RBSOA.

The device is designed for use in lighting applications and low cost switch-mode power supplies.

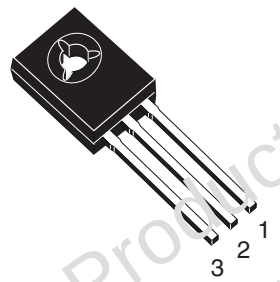

SOT-32

Figure 1. Internal schematic diagram

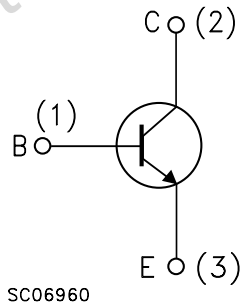

Table 1. Device summary

Order code	Marking	Package	Packaging
BULT118	BULT118	SOT-32	Tube

Obsolete Product(s) - Obsolete Product(s)
Obsolete Product(s) - Obsolete Product(s)

1 Electrical ratings

Table 2. Absolute maximum rating

Symbol	Parameter	Value	Unit
V_{CES}	Collector-emitter voltage (V_{BE} = 0)	700	V
V_{CEO}	Collector-emitter voltage (I_B = 0)	400	V
V_{EBO}	Emitter-base voltage (I_C = 0)	9	V
I_C	Collector current	2	A
I_{CM}	Collector peak current (t_P < 5 ms)	4	A
I_B	Base current	1	A
I_{BM}	Base peak current (t_P < 5 ms)	2	A
P_{tot}	Total dissipation at T_c = 25 °C	45	W
T_{stg}	Storage temperature	-65 to 150	°C
T_J	Max. operating junction temperature	150	°C

Obsolete Product(s) - Obsolete Product(s)
Obsolete Product(s) - Obsolete Product(s)

2 Electrical characteristics

(T_{case} = 25°C unless otherwise specified)

Table 3. Electrical characteristics

Symbol	Parameter	Test conditions	Min.	Typ.	Max.	Unit
I_{CES}	Collector cut-off current (V_{BE} =0)	V_{CE} = 700 V V_{CE} = 700 V T_C = 125 °C			100 500	µA µA
I_{CEO}	Collector-emitter leakage current	V_{CE} = 400 V			250	µA
V_{EBO}	Emitter-base voltage	I_E = 10 mA	9			V
$V_{CEO(sus)}$ (1)	Collector-emitter sustaining voltage (I_B = 0)	I_C = 10 mA	400			V
$V_{CE(sat)}$ (1)	Collector-emitter saturation voltage	I_C = 0.5 A I_B = 0.1 A I_C = 1 A I_B = 0.2 A I_C = 2 A I_B = 0.4 A			0.5 1 1.5	V V V
$V_{BE(sat)}$ (1)	Base-emitter saturation voltage	I_C = 0.5 A I_B = 0.1 A I_C = 1 A I_B = 0.2 A I_C = 2 A I_B = 0.4 A			1 1.2 1.3	V V V
h_{FE} (1)	DC current gain	I_C = 10 mA V_{CE} = 5 V I_C = 0.5 A V_{CE} = 5 V I_C = 2 A V_{CE} = 5 V	10 10 8		50	
	Resistive load					
t_r	Rise time	I_C = 1 A V_{CC}= 125 V		0.4	0.7	µs
t_s	Storage time	I_{B1} =-I_{B2} = 0.2 A		3.2	4.5	µs
t_f	Fall time			0.25	0.4	µs
	Inductive load	I_C = 1 A I_{B1} = 0.2 A				
t_s	Storage time	$V_{BE(off)}$ = -5 V L= 50 mH		0.8		µs
t_f	Fall time	V_{Clamp} = 300 V		0.16		µs

1. Pulsed duration = 300 µs, duty cycle ≤1.5 %

Obsolete Product(s) - Obsolete Product(s)

2.1 Electrical characteristics (curves)

Figure 2. Safe operating area

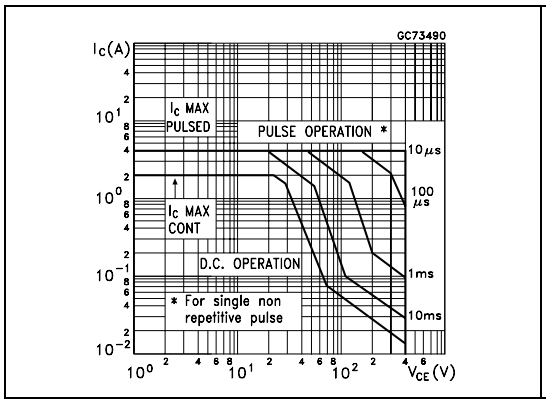

Figure 3. Derating curve

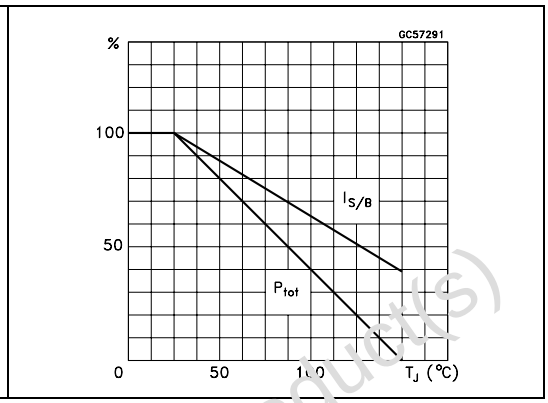

Figure 4. DC current gain

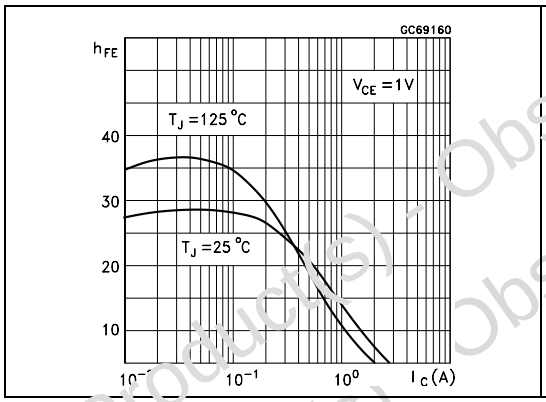

Figure 5. DC current gain

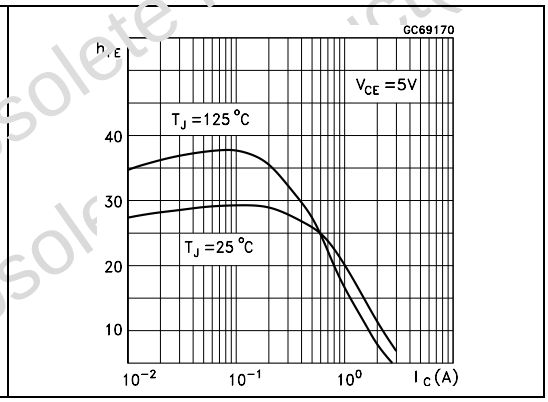

Figure 6. Collector-emitter saturation voltage

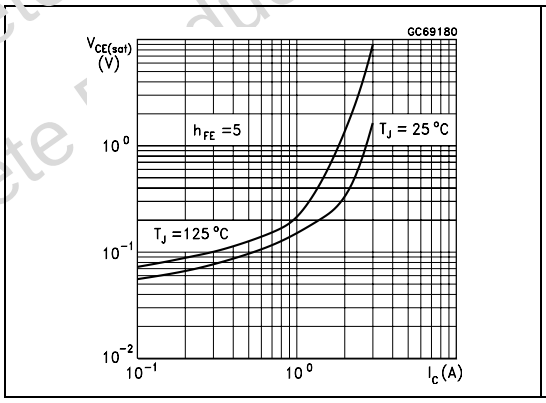

Figure 7. Base-emitter saturation voltage

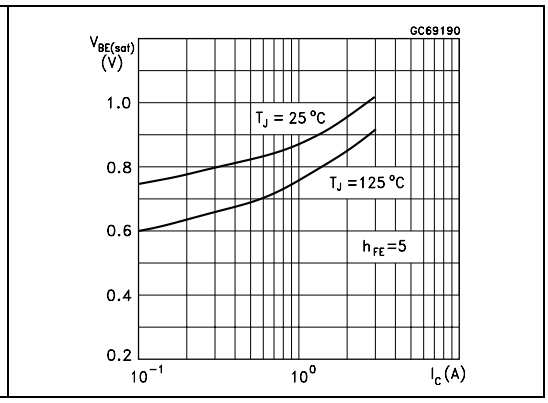

Obsolete Product(s)

Figure 8. Inductive load fall time

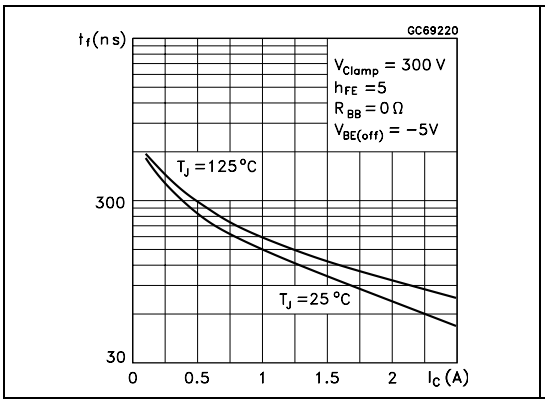

Figure 9. Inductive load storage time

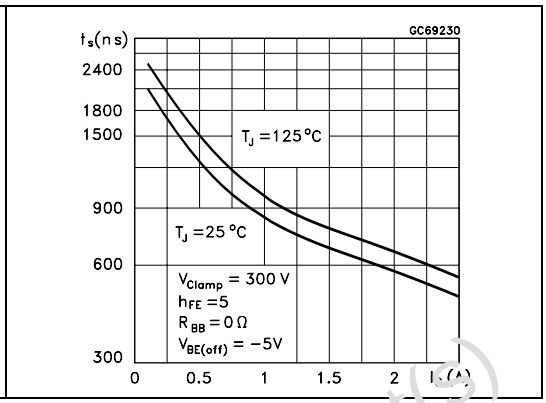

Figure 10. Resistive load fall time

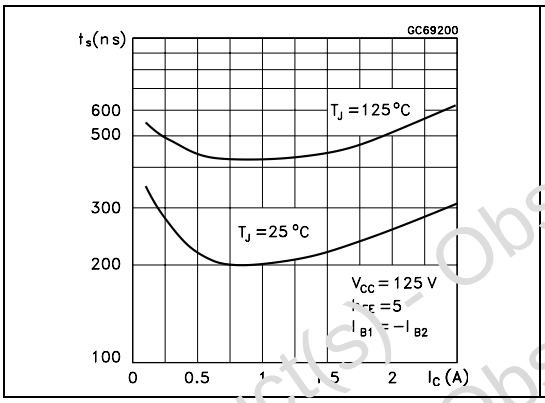

Figure 11. Resistive load storage time

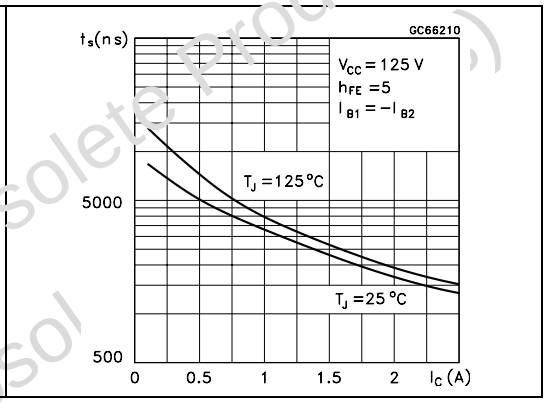

Figure 12. Reverse biased SOA

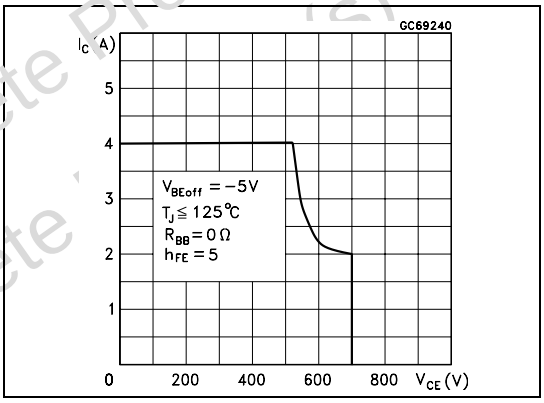

Obsolete Product(s) - Obsolete Product(s)

2.2 Test circuits

Figure 13. Resistive load switching test circuit

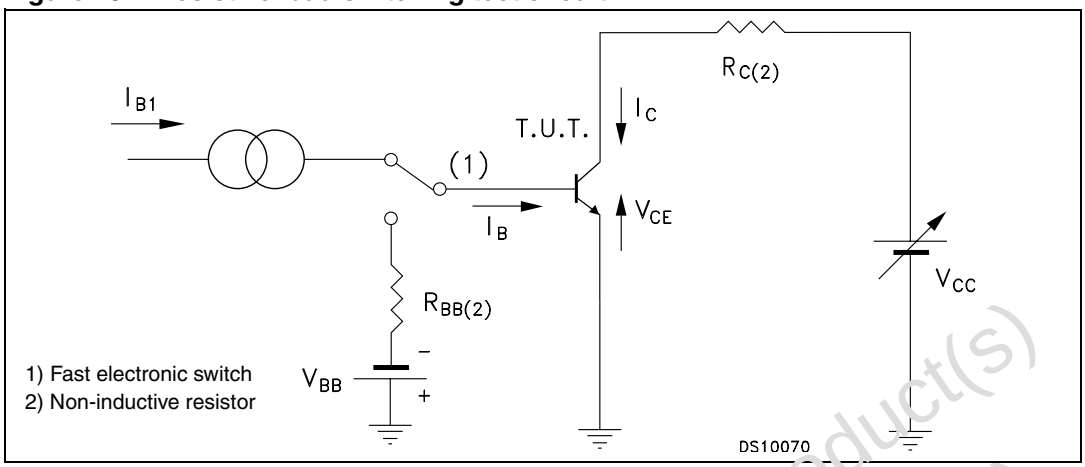

Figure 14. Inductive load switching test circuit

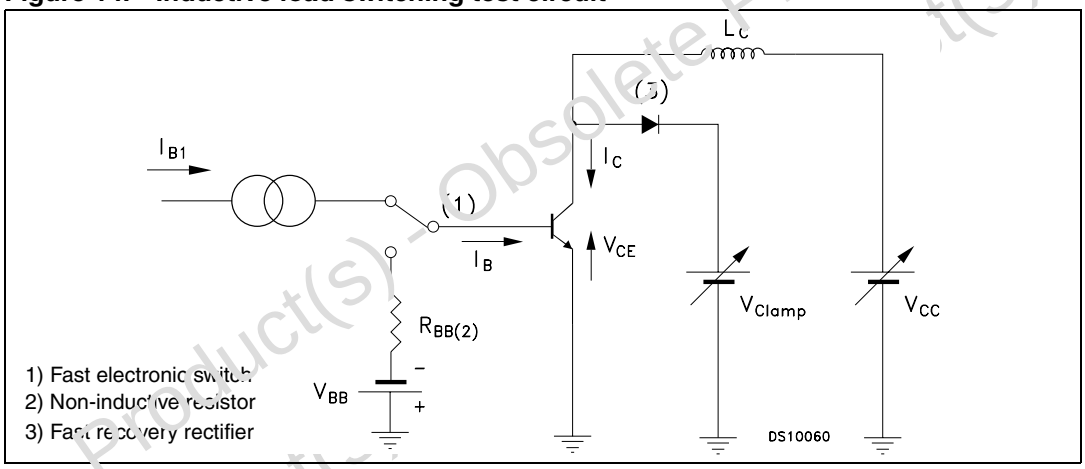

Obsolete Product(s) - Obsolete Product(s)

3 Package mechanical data

In order to meet environmental requirements, ST offers these devices in ECOPACK® packages. These packages have a lead-free second level interconnect. The category of second level interconnect is marked on the package and on the inner box label, in compliance with JEDEC Standard JESD97. The maximum ratings related to soldering conditions are also marked on the inner box label. ECOPACK is an ST trademark. ECOPACK specifications are available at: www.st.com

Obsolete Product(s) - Obsolete Product(s)
Obsolete Product(s) - Obsolete Product(s)

SOT-32 (TO-126) MECHANICAL DATA

DIM.	mm.		
	MIN.	TYP	MAX.
A	2.4		2.9
B	0.64		0.88
B1	0.39		0.63
D	10.5		11.05
E	7.4		7.8
e	2.04	2.29	2.54
e1	4.07	4.58	5.08
L	15.3		16
P	2.9		3.2
Q		3.8	
Q1	1		1.52
H2		2.15	
I		1.27	

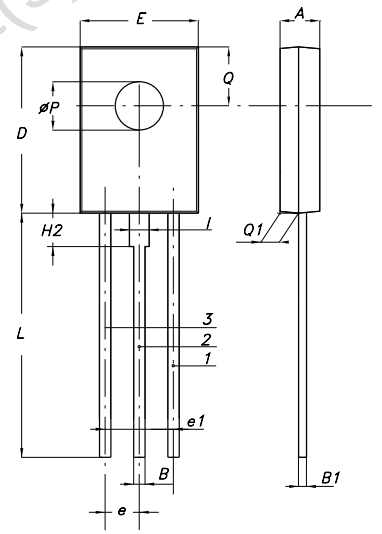

Obsolete Product(s) - Obsolete Product(s)

4 Revision history

Table 4. Document revision history

Date	Revision	Changes
29-Sep-2003	1	Initial release.
10-Jul-2008	2	Updated: $V_{CEO(sus)}$ condition in *Table 3 on page 3*, SOT-32 mechanical data, cover page

Obsolete Product(s) - Obsolete Product(s)
Obsolete Product(s) - Obsolete Product(s)

Please Read Carefully:

Information in this document is provided solely in connection with ST products. STMicroelectronics NV and its subsidiaries ("ST") reserve the right to make changes, corrections, modifications or improvements, to this document, and the products and services described herein at any time, without notice.

All ST products are sold pursuant to ST's terms and conditions of sale.

Purchasers are solely responsible for the choice, selection and use of the ST products and services described herein, and ST assumes no liability whatsoever relating to the choice, selection or use of the ST products and services described herein.

No license, express or implied, by estoppel or otherwise, to any intellectual property rights is granted under this document. If any part of this document refers to any third party products or services it shall not be deemed a license grant by ST for the use of such third party products or services, or any intellectual property contained therein or considered as a warranty covering the use in any manner whatsoever of such third party products or services or any intellectual property contained therein.

UNLESS OTHERWISE SET FORTH IN ST'S TERMS AND CONDITIONS OF SALE ST DISCLAIMS ANY EXPRESS OR IMPLIED WARRANTY WITH RESPECT TO THE USE AND/OR SALE OF ST PRODUCTS INCLUDING WITHOUT LIMITATION IMPLIED WARRANTIES OF MERCHANTABILITY, FITNESS FOR A PARTICULAR PURPOSE (AND THEIR EQUIVALENTS UNDER THE LAWS OF ANY JURISDICTION), OR INFRINGEMENT OF ANY PATENT, COPYRIGHT OR OTHER INTELLECTUAL PROPERTY RIGHT.

UNLESS EXPRESSLY APPROVED IN WRITING BY AN AUTHORIZE REPRESENTATIVE OF ST, ST PRODUCTS ARE NOT RECOMMENDED, AUTHORIZED OR WARRANTED FOR USE IN MILITARY, AIR CRAFT, SPACE, LIFE SAVING, OR LIFE SUSTAINING APPLICATIONS, NOR IN PRODUCTS OR SYSTEMS, WHERE FAILURE OR MALFUNCTION MAY RESULT IN PERSONAL INJURY, DEATH, OR SEVERE PROPERTY OR ENVIRONMENTAL DAMAGE. ST PRODUCTS WHICH ARE NOT SPECIFIED AS "AUTOMOTIVE GRADE" MAY ONLY BE USED IN AUTOMOTIVE APPLICATIONS AT USER'S OWN RISK.

Resale of ST products with provisions different from the statements and/or technical features set forth in this document shall immediately void any warranty granted by ST for the ST product or service described herein and shall not create or extend in any manner whatsoever, any liability of ST.

ST and the ST logo are trademarks or registered trademarks of ST in various countries.

Information in this document supersedes and replaces all information previously supplied.

The ST logo is a registered trademark of STMicroelectronics. All other names are the property of their respective owners.

© 2008 STMicroelectronics - All rights reserved

STMicroelectronics group of companies

Australia - Belgium - Brazil - Canada - China - Czech Republic - Finland - France - Germany - Hong Kong - India - Israel - Italy - Japan - Malaysia - Malta - Morocco - Singapore - Spain - Sweden - Switzerland - United Kingdom - United States of America

www.st.com

Obsolete Product(s) - Obsolete Product(s)

Mouser Electronics

Authorized Distributor

Click to View Pricing, Inventory, Delivery & Lifecycle Information:

STMicroelectronics:

BULT118 BULT118M