Air Cylinder: Standard Type
Double Acting, Single Rod
Series CG1

ø20, ø25, ø32, ø40, ø50, ø63, ø80, ø100

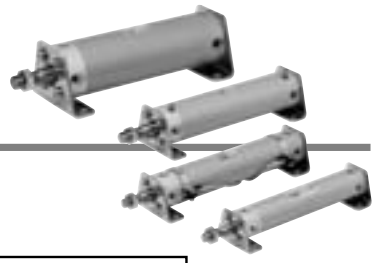

How to Order

CG1 L N 25 □ – 100 □ – □

With auto switch CDG1 L N 25 □ – 100 □ – M9BW □ – □

With auto switch
(Built-in magnet)

Mounting style

B	Basic style
L	Axial foot style
F	Rod side flange style
G	Head side flange style
U*	Rod side trunnion style
T*	Head side trunnion style
D	Clevis style

∗ Not available for ø80 or ø100.
Note) Mounting brackets are shipped together, (but not assembled).

Type

N	Rubber bumper
A	Air cushion

Bore size

20	20 mm	50	50 mm
25	25 mm	63	63 mm
32	32 mm	80	80 mm
40	40 mm	100	100 mm

Port thread type

Rubber bumper

Nil	Rc	ø20 to ø100
TN	NPT	ø20 to ø100
TF	G	ø32 to ø100

Air Cushion

Nil	M5 x 0.8	ø20, ø25
	Rc	ø32 to ø100
TN	NPT	ø32 to ø100
TF	M5 x 0.8	ø20, ø25
	G	ø32 to ø100

Cylinder stroke (mm)
Refer to "Standard Stroke" on page 223.

Auto switch

Nil	Without auto switch

∗ For the applicable auto switch model, refer to the table below.

Suffix for cylinder (Rod boot (at one end))

Nil	Without rod boot
J	Nylon tarpaulin
K	Heat resistant tarpaulin

∗ In the case of w/ rod boot, and a foot bracket or rod side flange as a bracket, those parts are to be assembled at the time of shipment.

Number of auto switches

Nil	2 pcs.
S	1 pc.
n	"n" pcs.

Made to Order
Refer to page 223 for details.

Built-in Magnet Cylinder Model

If a built-in magnet cylinder without an auto switch is required, there is no need to enter the symbol for the auto switch.
(Example) CDG1F32-100

Applicable Auto Switch/Refer to pages 1263 to 1371 for further information on auto switches.

Type	Special function	Electrical entry	Indicator light	Wiring (Output)	Load voltage DC		Load voltage AC	Auto switch model: Applicable bore size (mm) ø20 to ø63	ø80, ø100	Lead wire length (m) 0.5 (Nil)	1 (M)	3 (L)	5 (Z)	None (N)	Pre-wired connector	Applicable load	
Solid state switch	—	Grommet	Yes	3-wire (NPN)	24V	5V, 12V	—	M9N	—	●	●	●	○	—	○	IC circuit	Relay, PLC
								—	G59	●	—	●	○	—	○		
				3-wire (PNP)				M9P	—	●	●	●	○	—	○		
								—	G5P	●	—	●	○	—	○		
				2-wire		12V		M9B	—	●	●	●	○	—	○	—	
								—	K59	●	—	●	○	—	○		
		Connector						H7C	—	●	—	●	●	●	—		
	Diagnostic indication (2-color indication)	Grommet		3-wire (NPN)		5V,12V		M9NW	—	●	●	●	○	—	○	IC circuit	
								—	G59W	●	—	●	○	—	○		
				3-wire (PNP)				M9PW	—	●	●	●	○	—	○		
								—	G5PW	●	—	●	○	—	○		
				2-wire		12V		M9BW	—	●	●	●	○	—	○	—	
								—	K59W	●	—	●	○	—	○		
	Water resistant (2-color indication)							H7BA	G5BA	—	—	●	○	—	○		
	With diagnostic output (2-color indication)			4-wire (NPN)		5V,12V		H7NF	G59F	●	—	●	○	—	○	IC circuit	
Reed switch	—	Grommet	Yes	3-wire (NPN equivalent)	—	5V	—	A96	—	●	—	●	—	—	—	IC circuit	—
			None	2-wire	24V	12V	100V	A93	—	●	—	●	—	—	—	—	Relay, PLC
							100V or less	A90	—	●	—	●	—	—	—	IC circuit	
			Yes				100V, 200V	B54		●	—	●	●	—	—	—	
			None				200V or less	B64		●	—	●	—	—	—		
		Connector	Yes				—	C73C	—	●	—	●	●	●	—		
			None				24V or less	C80C	—	●	—	●	●	●	—	IC circuit	
	Diagnostic indication (2-color indication)	Grommet	Yes			—	—	B59W		●	—	●	—	—	—	—	

∗ Lead wire length symbols: 0.5 m ····· Nil (Example) M9NW
1 m ····· M (Example) M9NWM
3 m ····· L (Example) M9NWL
5 m ····· Z (Example) M9NWZ
None ····· N (Example) H7CN

∗ Solid state auto switches marked with "○" are produced upon receipt of order.
∗ D-A9□V/M9□V/M9□WV and D-M9□A(V)L cannot be mounted.

∗ Since there are other applicable auto switches than listed, refer to page 283 for details.
∗ For details about auto switches with pre-wired connector, refer to pages 1328 and 1329.
∗ D-A9□/M9□/M9□W auto switches are shipped together (not assembled). (Only auto switch mounting brackets are assembled before shipped.)

SMC
Courtesy of Steven Engineering, Inc.-230 Ryan Way, South San Francisco, CA 94080-6370-Main Office: (650) 588-9200-Outside Local Area: (800) 258-9200-www.stevenengineering.com

Substantially shorter length:

ø20 to ø40··· –15 to –30 mm
(in comparison with Series CM2)
ø40 to ø63··· –17 to –28 mm
(in comparison with Series CA2)
ø80, ø100··· –9 to –33 mm
(in comparison with Series CA2)

JIS Symbol

Double acting

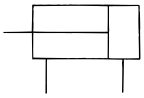

Made to Order

(Refer to pages 1373 to 1498 for details.)

Symbol	Specifications
—XA□	Change of rod end shape
—XB6	Heat resistant cylinder (150°C) *1
—XB7	Cold resistant cylinder
—XB9	Low speed cylinder (10 to 50 mm/s) *3
—XB13	Low speed cylinder (5 to 50 mm/s) *3
—XC4	With heavy duty scraper
—XC6	Piston rod and rod end nut made of stainless steel
—XC8	Adjustable stroke cylinder/Adjustable extension type
—XC9	Adjustable stroke cylinder/Adjustable retraction type
—XC10	Dual stroke cylinder/Double rod type
—XC11	Dual stroke cylinder/Single rod type
—XC12	Tandem type cylinder *3
—XC13	Auto switch rail mounting style
—XC20	Head cover axial port *3
—XC22	Fluororubber seals
—XC27	Stainless steel double clevis pin
—XC29	Double knuckle joint with spring pin
—XC35	With coil scraper
—XC37	Larger throttle diameter of connecting port
—XC42	Built-in rear shock absorber

∗ 1 Cylinders with rubber bumper have no bumper.
∗ 2 Compatible with cylinders with rubber bumper, but has no bumper.
∗ 3 Compatible with cylinders with rubber bumper only.

Refer to pages 279 to 283 for cylinders with auto switches.

- Minimum auto switch mounting stroke
- Proper auto switch mounting position (detection at stroke end) and mounting height
- Operating range
- Switch mounting bracket: Part no.

Specifications

Bore size (mm)	20	25	32	40	50	63	80	100
Action	Double acting, Single rod							
Lubricant	Not required (Non-lube)							
Fluid	Air							
Proof pressure	1.5 MPa							
Maximum operating pressure	1.0 MPa							
Minimum operating pressure	0.05 MPa							
Ambient and fluid temperature	Without auto switch: –10 to 70°C (No freezing)							
	With auto switch: –10 to 60°C (No freezing)							
Piston speed	50 to 1000 mm/s						50 to 700 mm/s	
Stroke length tolerance	Up to 1000 $^{st+1.4}_{0}$ mm, Up to 1200 $^{st+1.8}_{0}$ mm						Up to 1000 $^{st+1.4}_{0}$ mm Up to 1500 $^{st+1.8}_{0}$ mm	
Cushion	Rubber bumper, Air cushion							
Mounting *	Basic style, Axial foot style, Rod side flange style, Head side flange style, Rod side trunnion style, Head side trunnion style, Clevis style (Used for changing the port location by 90°.)							

Rod/Head side trunnion styles are not available for bore sizes ø80 and ø100.

Accessory

Mounting		Basic style	Axial foot style	Rod side flange style	Head side flange style	Rod side trunnion style	Head side trunnion style	Clevis style
Standard equipment	Rod end nut	●	●	●	●	●	●	●
	Clevis pin	—	—	—	—	—	—	●
Option	Single knuckle joint	●	●	●	●	●	●	●
	Double knuckle joint (With pin) **	●	●	●	●	●	●	●
	Pivot bracket	—	—	—	—	● *	● *	●
	Rod boot	●	●	●	●	●	●	●

∗ Trunnion bracket is not available for ø80 and ø100.
∗∗ Pin and retaining ring are shipped together with double knuckle joint.

Standard Stroke

Bore size (mm)	Standard stroke (1) (mm)	Long stroke (2) (mm)	Maximum manufacturable stroke (mm)
20	25, 50, 75, 100, 125, 150, 200	201 to 350	1500
25	25, 50, 75, 100, 125, 150, 200, 250, 300	301 to 400	
32		301 to 450	
40		301 to 800	
50, 63		301 to 1200	
80		301 to 1400	
100		301 to 1500	

Note 1) Manufacture of intermediate strokes at 1 mm intervals is possible. (Spacers are not used.)
Note 2) Long stroke is compatible with the axial foot and rod side flange types. When other mounting brackets are used or the long stroke exceeds the limit, the allowable maximum stroke length is determined using the stroke selection table (front matter 28)

Rod Boot Material

Symbol	Rod boot material	Maximum operating temperature
J	Nylon tarpaulin	70°C
K	Heat resistant tarpaulin	110°C *

∗ Maximum ambient temperature for the rod boot itself.

Courtesy of Steven Engineering, Inc.-230 Ryan Way, South San Francisco, CA 94080-6370-Main Office: (650) 588-9200-Outside Local Area: (800) 258-9200-www.stevenengineering.com

Mounting Bracket Part No.

Mounting bracket	Min. order	Bore size (mm)								Description
		20	25	32	40	50	63	80	100	
Foot	Note) 2	CG-L020	CG-L025	CG-L032	CG-L040	CG-L050	CG-L063	CG-L080	CG-L100	Foot x 2, Mounting bolt x 8
Flange	1	CG-F020	CG-F025	CG-F032	CG-F040	CG-F050	CG-F063	CG-F080	CG-F100	Flange x 1, Mounting bolt x 4
Trunnion pin	1	CG-T020	CG-T025	CG-T032	CG-T040	CG-T050	CG-T063	–	–	Trunnion pin x 2, Trunnion bolt x 2, Flat washer x 2
Cleveis	1	CG-D020	CG-D025	CG-D032	CG-D040	CG-D050	CG-D063	CG-D080	CG-D100	Clevis x 1, Mounting bolt x 4, Clevis pin x 1, Retaining ring x 2
Pivot bracket	1	CG-020-24A	CG-025-24A	CG-032-24A	CG-040-24A	CG-050-24A	CG-063-24A	CG-080-24A	CG-100-24A	Pivot bracket x 1

Note) Order two foot brackets per cylinder.

Mass

(kg)

Bore size (mm)		20	25	32	40	50	63	80	100
Basic mass	Basic style	0.10	0.17	0.26	0.41	0.77	1.07	2.04	3.17
	Axial foot style	0.21	0.30	0.42	0.63	1.25	1.79	3.00	4.92
	Flange style	0.18	0.27	0.40	0.61	1.11	1.57	2.75	4.52
	Trunnion style	0.11	0.19	0.29	0.46	0.91	1.21	–	–
	Clevis style	0.15	0.25	0.41	0.64	1.17	1.75	2.75	4.45
Pivot bracket		0.08	0.09	0.17	0.25	0.44	0.80	0.98	1.75
Single knuckle joint		0.05	0.09	0.09	0.10	0.22	0.22	0.39	0.57
Double knuckle joint (With pin)		0.05	0.09	0.09	0.13	0.26	0.26	0.64	1.31
Additional mass per each 50 mm of stroke		0.05	0.07	0.09	0.15	0.22	0.26	0.35	0.49
Additional mass with air cushion		0.01	0.01	0.02	0.02	0.03	0.03	0.03	0.03
Additional mass for long stroke		0.01	0.01	0.02	0.03	0.06	0.10	0.19	0.26

Calculation: (Example) **CG1LA20-100** (Foot style, ø20, 100 st)

- Basic mass····· 0.21 kg (Foot, ø20)
- Additional mass····· 0.05 kg/50 stroke
- Cylinder stroke·····100 stroke
- Additional mass by air cushion·····0.01 kg

0.21 + 0.05 x 100/50 + 0.01 = 0.32 kg

Mounting Procedure

Mounting procedure for trunnion

Follow the procedures below when mounting a pivot bracket on the trunnion.

ø20 to ø63

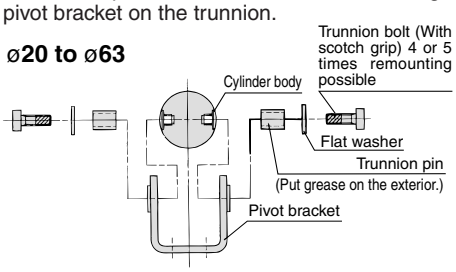

Mounting procedure for clevis

Follow the procedures below when mounting a pivot bracket on the clevis style.

ø20 to ø63

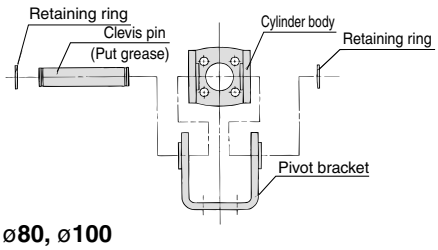

ø80, ø100

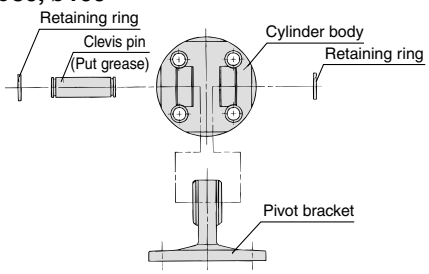

SMC
Courtesy of Steven Engineering, Inc.-230 Ryan Way, South San Francisco, CA 94080-6370-Main Office: (650) 588-9200-Outside Local Area: (800) 258-9200-www.stevenengineering.com

Built-in One-touch Fittings

CG1 Mounting style N Bore size F — Stroke

F: Built-in One-touch fittings

This type has the One-touch fittings integrated in a cylinder, which enables to reduce the piping labor and installing space dramatically.

Specifications

Bore size (mm)	20, 25, 32, 40, 50, 63
Action	Double acting
Fluid	Air
Maximum operating pressure	1.0 MPa
Minimum operating pressure	0.05 MPa
Piston speed	50 to 750 mm/s
Cushion	Rubber bumper
Mounting	Basic style, Axial foot style, Rod side flange style Head side flange style, Rod side trunnion style Head side trunnion style, Clevis style (Used for changing the port location by 90°.)

∗ Auto switch can be mounted.

Applicable Tubing O.D./I.D.

Bore size (mm)	20	25	32	40	50	63
Applicable tubing O.D. (mm)	6/4	6/4	6/4	8/6	10/7.5	10/7.5
Applicable tubing material	Can be used for either nylon, soft nylon or polyurethane tubing.					

∗ For other specifications, refer to page 223.

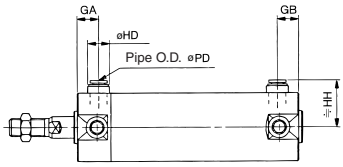

∗ Other dimensions are the same as the double acting single rod standard type.

Bore size (mm)	GA	GB	HD	HH	PD
20	12	12	13	24.2	6
25	12	10(12)	13	26.7	6
32	12	10(12)	13	30.2	6
40	12	10(12)	16	34.6	8
50	13	13	20	40.6	10
63	13	13	20	47.1	10

Note) ( ): Long stroke

Air-hydro

CG1 Mounting style H Bore size — Stroke

H: Air-hydro

Low pressure hydraulic cylinder of 1.0 MPa or less
When used together with a Series CC air-hydro unit, constant and low speed actuation and intermediate stopping similar to hydraulic units are possible with the use of valves and other pneumatic equipment.

Specifications

Type	Air-hydro
Bore size (mm)	20, 25, 32, 40, 50, 63
Action	Double acting
Fluid	Turbine oil
Proof pressure	1.5 MPa
Maximum operating pressure	1.0 MPa
Minimum operating pressure	0.18 MPa
Piston speed	15 to 300 mm/s
Cushion	None
Ambient and fluid temperature	5 to 60°C
Mounting	Basic style, Axial foot style, Rod side flange style Head side flange style, Rod side trunnion style Head side trunnion style, Clevis style (Used for changing the port location by 90°.)

∗ Auto switch can be mounted.

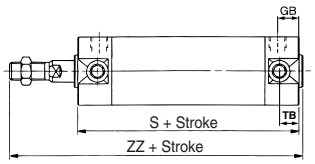

∗ Other dimensions are the same as the double acting single rod standard type.

Bore size (mm)	GB	TB	S	ZZ
20	12	11	77	114
25	12	11	77	119
32	12	11	79	121
40	13	12	87	139
50	14	13	102	162
63	14	13	102	162

Clean Series

10-CG1 Mounting style N Bore size — Stroke

10: Clean series (With relief port)

The type which is applicable for using inside the clean room graded Class 100 by making an actuator's rod section a double seal construction and discharging by relief port directly to the outside of clean room.

Specifications

Bore size (mm)	20, 25, 32, 40, 50, 63, 80, 100
Action	Double acting
Fluid	Air
Maximum operating pressure	1.0 MPa
Minimum operating pressure	0.05 MPa
Cushion	Rubber bumper
Piston speed	30 to 400 mm/s
Relief port size	M5 x 0.8
Mounting	Basic style, Axial foot style, Rod side flange style Head side flange style

∗ Auto switch can be mounted.

For details, refer to the separate catalog, "Pneumatic Clean Series".

Copper and Fluorine-free

20-CG1 Mounting style Type Port thread type — Stroke

20: Copper/Fluorine-free

The type which prevents copper based ions from generating by changing the copper based materials into electroless nickel plated treatment or non-copper materials in order to eliminate the effects by copper based ions or fluororesins over the color cathode ray tube.

Specifications

Bore size (mm)		20, 25, 32, 40, 50, 63, 80, 100
Action		Double acting
Fluid		Air
Maximum operating pressure		1.0 MPa
Minimum operating pressure		0.05 MPa
Cushion	Type N	With rubber bumper
	Type A	With air cushion
Piston speed	ø20 to 63	50 to 1000 mm/s
	ø80·100	50 to 700 mm/s
Mounting ∗		Basic style, Axial foot style, Rod side flange style Head side flange style, Rod side trunnion style Head side trunnion style, Clevis style (Used for changing the port location by 90°.)

∗ Dimensions are the same as double acting single rod, standard type.
∗ Auto switch can be mounted.

Courtesy of Steven Engineering, Inc.-230 Ryan Way, South San Francisco, CA 94080-6370-Main Office: (650) 588-9200-Outside Local Area: (800) 258-9200-www.stevenengineering.com

Water Resistant

CDG1 | Mounting style | Style | Bore size | Port thread type | R | Stroke | H7BAL | -XC6

With auto switch
(Built-in magnet)

Water resistant cylinder

R	NBR seals (Nitrile rubber)
V	FKM seals (Fluoro rubber)

Water resistant 2-color indication, Solid state switch

H7BAL	ø32 to ø63
G5BAL	ø80, ø100

Made to Order

⚠ Caution

Since the scraper is press-fit into the rod cover, it cannot be replaced.

Applicable for use in an environment with water splashing such as food processing and car wash equipment, etc.

Specifications

Bore size (mm)	**32, 40, 50, 63, 80, 100**
Action	Double acting, Single rod
Cushion	Rubber bumper/Air cushion
Auto switch mounting	Band mounting style
Made to order	Piston rod/Rod end nut material: Stainless steel (-XC6)

∗ Specifications other than above are the same as standard, basic style.

Dimensions

With rubber bumper

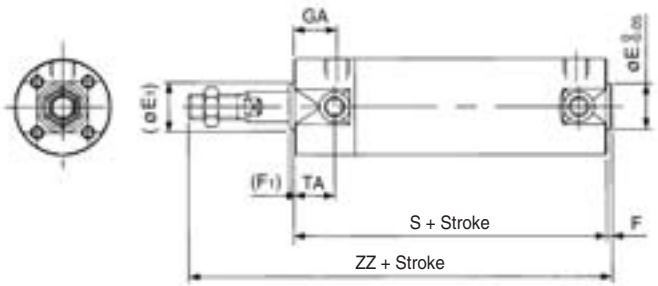

With air cushion

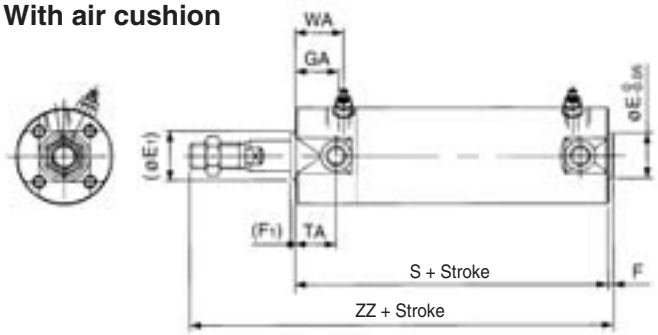

(mm)

Bore size (mm)	(E1)	E∗	(F1)	F∗	GA	S	TA	WA	ZZ
32	17	18	2	2	18	77 (85)	17	22	119 (127)
40	21	25	2	2	19	84 (93)	18	22	136 (145)
50	26	30	2	2	21	97 (109)	20	25	157 (169)
63	26	32	2	2	21	97 (109)	20	25	157 (169)
80	32	40	3	3	28	116 (130)	–	30	190 (204)
100	37	50	3	3	29	117 (131)	–	31	191 (205)

∗ Other dimensions are the same as the double acting single rod standard type.
∗ ( ): Denotes the dimensions for long stroke.

Refer to page 895 for details.

⚠ Precautions

Be sure to read before handling.
Refer to front matters 54 and 55 for Safety Instructions and pages 3 to 11 for Actuator and Auto Switch Precautions.

Operating Precautions

⚠ Warning

1. **Do not operate the cushion valve in the fully closed or fully opened state.**
   Using it in the fully closed state will cause the cushion seal to be damaged. Using it in the fully opened state will cause the piston rod assembly or the cover to be damaged.
2. **Operate within the specified cylinder speed.**
   Otherwise, cylinder and seal damage may occur.
3. **When the cylinder is used as mounted with a single side fixed or free (basic type, flange type), a bending moment will be applied to the cylinder due to the vibration generated at the stroke end, and the cylinder may be damaged. In such a case, mount a bracket to reduce the vibration of the cylinder or use the cylinder at a piston speed low enough to prevent the cylinder from vibrating at the stroke end.**
   Furthermore, when the cylinder is moved or the long stroke cylinder is mounted horizontally and with a single side fixed, use a bracket to fix the cylinder.

⚠ Caution

1. **Do not use the air cylinder as an air-hydro cylinder.**
   This will cause an oil leak.
2. **Install a rod boot without twisting.**
   If the cylinder is installed with its bellows twisted, it could damage the bellows.
3. **Tighten clevis bracket mounting bolts with the following proper tightening torque.**
   ø20: 1.5N·m, ø25 to 32: 2.9N·m, ø40: 4.9N·m,
   ø50: 11.8N·m, ø63 to 80: 24.5N·m, ø100: 42.2N·m

Disassembly/Replacement

⚠ Caution

1. **Do not replace the bushings.**
   The bushings are press-fit. To replace them, they must be replaced together with the cover assembly.
2. **To replace a seal, apply grease to the new seal before installing it.**
   If the cylinder is put into operation without applying grease to the seal, it could cause the seal to wear significantly, leading to premature air leakage.
3. **Do not replace One-touch fittings.**
   Because pipe fittings are press-fit, they must be replaced together with the cover assembly.
4. **Those with a bore of ø50 or more cannot be disassembled.**
   When disassembling cylinders with bore sizes of ø20 through ø40, grip the double flat part of either the head cover or the rod cover with a vise and loosen the other side with a wrench or a monkey wrench, etc., and then remove the cover. When re-tightening, tighten approximately 2 degrees more than the original position. (Cylinders with ø50 or larger bore sizes are tightened with a large tightening torque and cannot be disassembled. Please contact SMC when disassembly is required.)

Courtesy of Steven Engineering, Inc.-230 Ryan Way, South San Francisco, CA 94080-6370-Main Office: (650) 588-9200-Outside Local Area: (800) 258-9200-www.stevenengineering.com

Construction

With rubber bumper

ø80, ø100 ø80, ø100

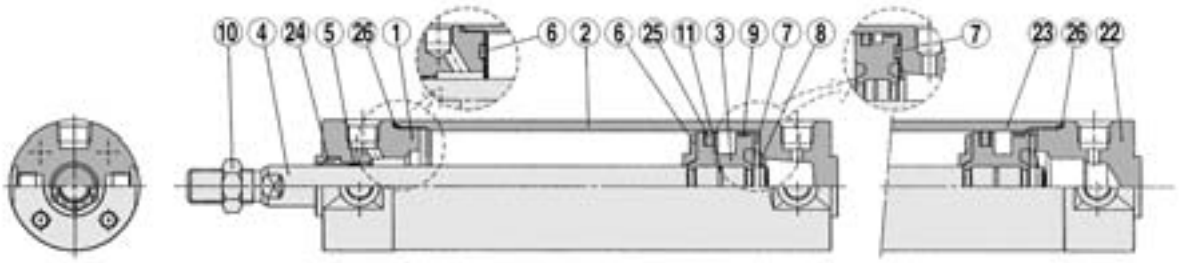

Long stroke

With air cushion

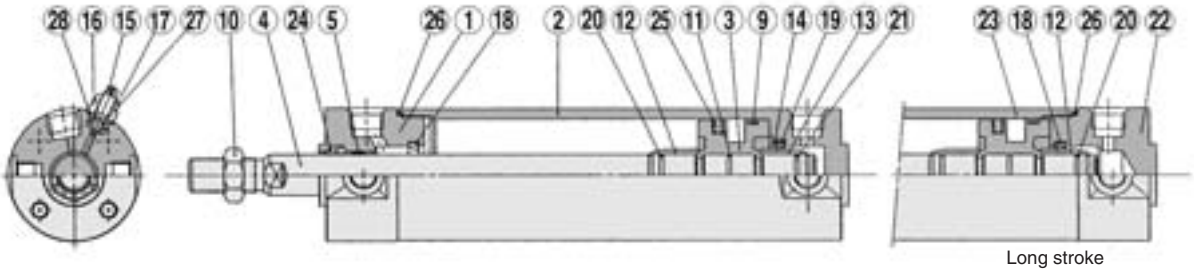

Long stroke

Component Parts

No.	Description	Material	Note
1	**Rod cover**	Aluminum alloy	Clear hard anodized
2	**Tube cover**	Aluminum alloy	Clear hard anodized
3	**Piston**	Aluminum alloy	Chromated
4	**Piston rod**	Carbon steel*	Hard chrome plated*
5	**Bushing**	Copper oil-impregnated sintered alloy	ø40 or more: Copper alloy
6	**Bumper A**	Urethane	
7	**Bumper B**	Urethane	ø40 or larger: The same as bumper A
8	**Retaining ring**	Stainless steel	Except ø80 and ø100
9	**Wear ring**	Resin	
10	**Rod end nut**	Rolled steel	Nickel plated
11	**Piston gasket**	NBR	
12	**Cushion ring A**	Brass	
13	**Cushion ring B**	Brass	ø32 or larger: The same as A
14	**Seal retainer**	Rolled steel	Nickel plated/Except long stroke
15	**Cushion valve**	Rolled steel	Electroless nickel plated
16	**Valve retainer**	Rolled steel	Electroless nickel plated
17	**Lock nut**	Rolled steel	Nickel plated
18	**Cushion seal A**	Urethane	
19	**Cushion seal B**	Urethane	ø32 or larger: The same as A
20	**Cushion ring gasket A**	NBR	
21	**Cushion ring gasket B**	NBR	ø32 or larger: The same as A
22	**Head cover**	Aluminum alloy	Clear hard anodized
23	**Cylinder tube**	Aluminum alloy	Hard anodized
24	**Rod seal**	NBR	
25	**Piston seal**	NBR	
26	**Tube gasket**	NBR	
27	**Valve seal**	NBR	
28	**Valve retaining gasket**	NBR	

Note) In the case of cylinders with auto switches, magnets are installed in the piston.
* The material is stainless steel on auto switch equipped styles ø20 and ø25.

Replacement Parts/Seal Kit

• For rubber bumper

Bore size (mm)	Kit no.	Contents
20	CG1N20-PS	Set of the nos. ㉔, ㉕, ㉖
25	CG1N25-PS	
32	CG1N32-PS	
40	CG1N40-PS	

• For air cushion

Bore size (mm)	Kit no.	Contents
20	CG1A20-PS	Set of the nos. ㉔, ㉕, ㉖, ㉗, ㉘
25	CG1A25-PS	
32	CG1A32-PS	
40	CG1A40-PS	

Note) Refer to the Specific Product Precautions on page 226 for Disassembly/Replacement.
Order with a part number for each type and bore size.
* The seal kit includes a grease pack (10 g). Order with the following part number when only the grease pack is needed.
Grease pack part no.: GR-S-010 (10 g)

Courtesy of Steven Engineering, Inc.-230 Ryan Way, South San Francisco, CA 94080-6370-Main Office: (650) 588-9200-Outside Local Area: (800) 258-9200-www.stevenengineering.com

Basic Style: CG1B□

With rubber bumper

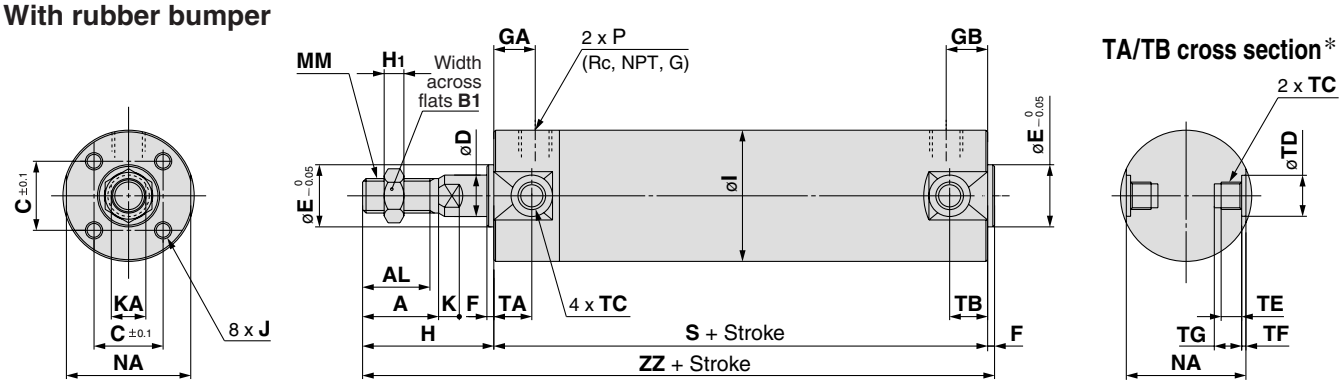

With rod boot

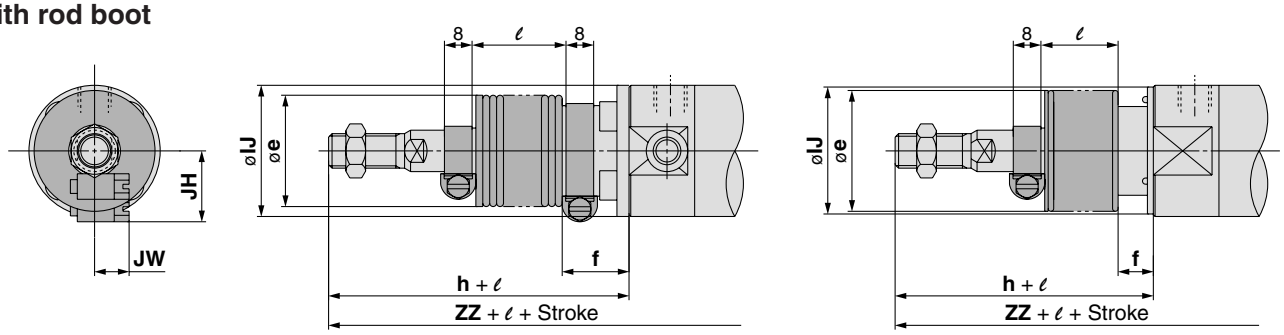

ø20 to ø63 ø80, ø100

With air cushion

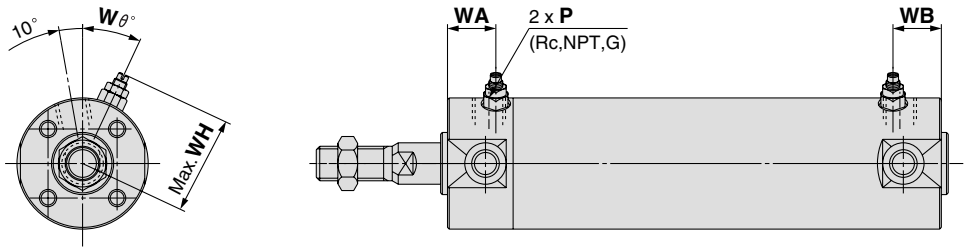

(mm)

Bore size (mm)	Stroke range (mm) Standard	Stroke range (mm) Long stroke	Rc, NPT port GA	Rc, NPT port GB	Rc, NPT port P	G port GA	G port GB	G port P	A	AL	B1	C	D	E	F	H	H1	I	J	K	KA	MM	NA	S	TA	TB	ZZ
20	Up to 200	201 to 350	12	10(12)	1/8	12	10(12)	M5 x 0.8	18	15.5	13	14	8	12	2	35	5	26	M4 x 0.7 depth 7	5	6	M8 x 1.25	24	69(77)	11	11	106(114)
25	Up to 300	301 to 400	12	10(12)	1/8	12	10(12)	M5 x 0.8	22	19.5	17	16.5	10	14	2	40	6	31	M5 x 0.8 depth 7.5	5.5	8	M10 x 1.25	29	69(77)	11	11	111(119)
32	Up to 300	301 to 450	12	10(12)	1/8	10	9(10)	1/8	22	19.5	17	20	12	18	2	40	6	38	M5 x 0.8 depth 8	5.5	10	M10 x 1.25	35.5	71(79)	11	10(11)	113(121)
40	Up to 300	301 to 800	13	10(13)	1/8	10	9(10)	1/8	30	27	19	26	16	25	2	50	8	47	M6 x 1 depth 12	6	14	M14 x 1.5	44	78(87)	12	10(12)	130(139)
50	Up to 300	301 to 1200	14	12(14)	1/4	12	11(12)	1/4	35	32	27	32	20	30	2	58	11	58	M8 x 1.25 depth 16	7	18	M18 x 1.5	55	90(102)	13	12(13)	150(162)
63	Up to 300	301 to 1200	14	12(14)	1/4	12	11(12)	1/4	35	32	27	38	20	32	2	58	11	72	M10 x 1.5 depth 16	7	18	M18 x 1.5	69	90(102)	13	12(13)	150(162)
80	Up to 300	301 to 1400	20	16(20)	3/8	17	16(17)	3/8	40	37	32	50	25	40	3	71	13	89	M10 x 1.5 depth 22	10	22	M22 x 1.5	80	108(122)	—	—	182(196)
100	Up to 300	301 to 1500	20	16(20)	1/2	17	16(17)	1/2	40	37	41	60	30	50	3	71	16	110	M12 x 1.75 depth 22	10	26	M26 x 1.5	100	108(122)	—	—	182(196)

Note) ( ): Denotes the dimensions for long stroke.

TA/TB Sectional View (mm)

Bore size (mm)	TC*	TD	TE	TF	TG
20	M5 x 0.8	$8^{+0.08}_{0}$	4	0.5	5.5
25	M6 x 0.75	$10^{+0.08}_{0}$	5	1	6.5
32	M8 x 1.0	$12^{+0.08}_{0}$	5.5	1	7.5
40	M10 x 1.25	$14^{+0.08}_{0}$	6	1.25	8.5
50	M12 x 1.25	$16^{+0.08}_{0}$	7.5	2	10
63	M14 x 1.5	$18^{+0.08}_{0}$	11.5	3	14.5
80	—	—	—	—	—
100	—	—	—	—	—

* Trunnion mounting taps with width across flats NA are not attached for bore size ø80 and ø100.

With Rod Boot (mm)

Bore size (mm)	e	f	h	IJ	JH (Reference)	JW (Reference)	ℓ	ZZ
20	30	18	55	27	15.5	10.5	0.25 stroke	126(134)
25	30	19	62	32	16.5	10.5		133(141)
32	35	19	62	38	18.5	10.5		135(143)
40	35	19	70	48	21.5	10.5		150(159)
50	40	19	78	59	24	10.5		170(182)
63	40	20	78	72	24	10.5		170(182)
80	52	10	80	59	—	—		191(205)
100	62	7	80	71	—	—		191(205)

* The minimum stroke with rod boot is 20 mm.

With Air Cushion (mm)

Bore size (mm)	Rc, NPT, G P	WA	WB	WH	Wθ
20	M5 x 0.8	16	15(16)	23	30°
25	M5 x 0.8	16	15(16)	25	30°
32	1/8	16	15(16)	28.5	25°
40	1/8	16	15(16)	33	20°
50	1/4	18	17(18)	40.5	20°
63	1/4	18	17(18)	47.5	20°
80	3/8	22	22	60.5	20°
100	1/2	22	22	71	20°

SMC
Courtesy of Steven Engineering, Inc.-230 Ryan Way, South San Francisco, CA 94080-6370-Main Office: (650) 588-9200-Outside Local Area: (800) 258-9200-www.stevenengineering.com

Axial Foot Style:CG1L□

With rubber bumper

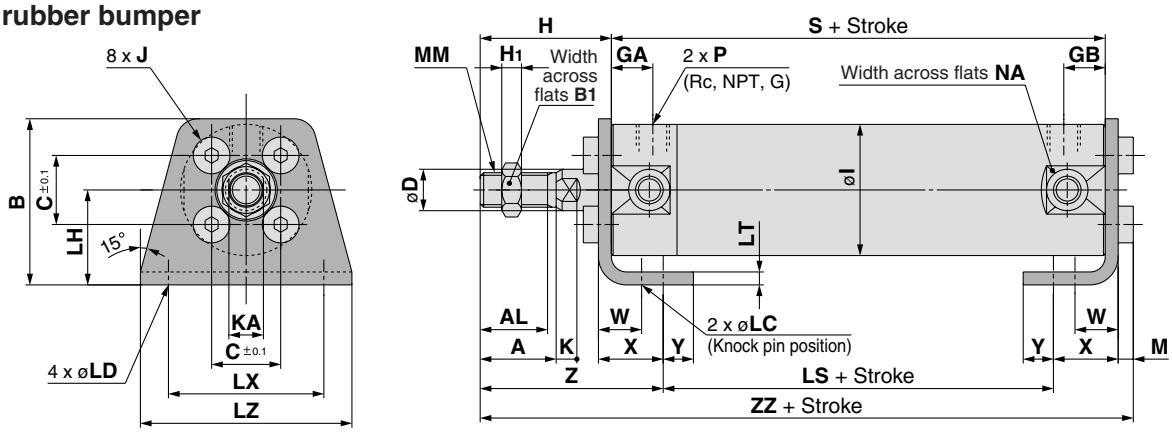

With rod boot

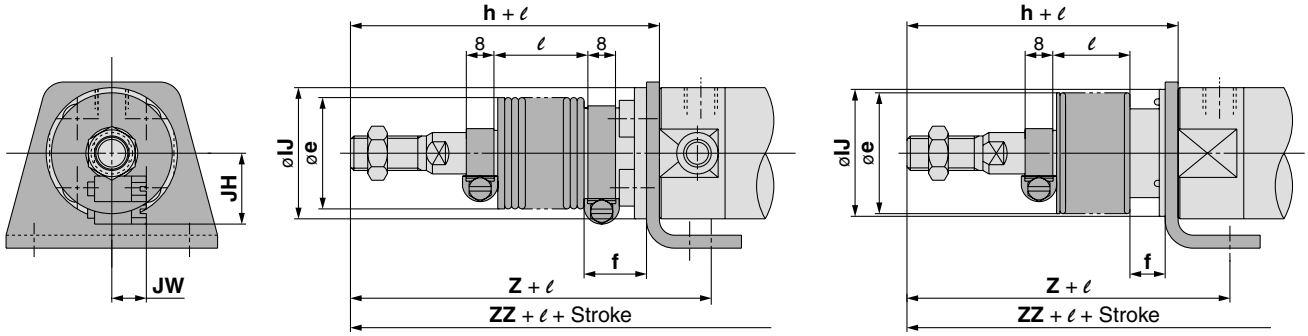

ø20 to ø63 ø80, ø100

With air cushion

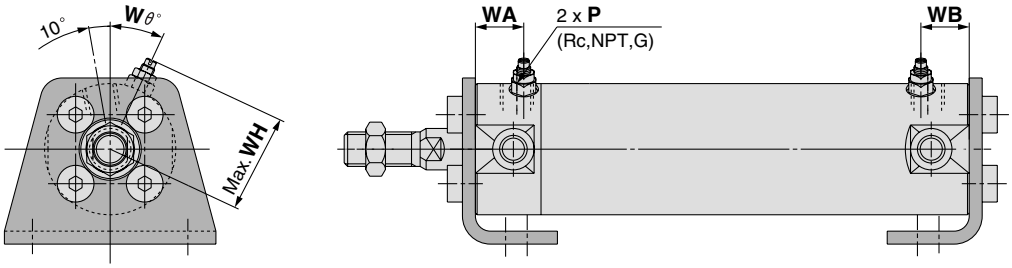

(mm)

Bore size (mm)	Stroke range (mm) Standard	Stroke range (mm) Long stroke	Rc, NPT port GA	Rc, NPT port GB	Rc, NPT port P	G port GA	G port GB	G port P	A	AL	B1	B	C	D	H	H1	I	J	K	KA	LC	LD	LH	LS	LT	LX	LZ	M
20	Up to 200	201 to 350	12	10(12)	1/8	12	10(12)	M5 x 0.8	18	15.5	13	34	14	8	35	5	26	M4 x 0.7	5	6	4	6	20	45(53)	3	32	44	3
25	Up to 300	301 to 400	12	10(12)	1/8	12	10(12)	M5 x 0.8	22	19.5	17	38.5	16.5	10	40	6	31	M5 x 0.8	5.5	8	4	6	22	45(53)	3	36	49	3.5
32	Up to 300	301 to 450	12	10(12)	1/8	10	9(10)	1/8	22	19.5	17	45	20	12	40	6	38	M5 x 0.8	5.5	10	4	7	25	45(53)	3	44	58	3.5
40	Up to 300	301 to 800	13	10(13)	1/8	10	9(10)	1/8	30	27	19	54.5	26	16	50	8	47	M6 x 1	6	14	4	7	30	51(60)	3	54	71	4
50	Up to 300	301 to 1200	14	12(14)	1/4	12	11(12)	1/4	35	32	27	70.5	32	20	58	11	58	M8 x 1.25	7	18	5	10	40	55(67)	4.5	66	86	5
63	Up to 300	301 to 1200	14	12(14)	1/4	12	11(12)	1/4	35	32	27	82.5	38	20	58	11	72	M10 x 1.5	7	18	5	12	45	55(67)	4.5	82	106	5
80	Up to 300	301 to 1400	20	16(20)	3/8	17	16(17)	3/8	40	37	32	101	50	25	71	13	89	M10 x 1.5	10	22	6	11	55	60(74)	4.5	100	125	5
100	Up to 300	301 to 1500	20	16(20)	1/2	17	16(17)	1/2	40	37	41	121	60	30	71	16	110	M12 x 1.75	10	26	6	14	65	60(74)	6	120	150	7

(mm)

Bore size (mm)	MM	NA	S	W	X	Y	ZZ
20	M8 x 1.25	24	69(77)	10	15	7	110(118)
25	M10 x 1.25	29	69(77)	10	15	7	115.5(123.5)
32	M10 x 1.25	35.5	71(79)	10	16	8	117.5(125.5)
40	M14 x 1.5	44	78(87)	10	16.5	8.5	135(144)
50	M18 x 1.5	55	90(102)	17.5	22	11	157.5(169.5)
63	M18 x 1.5	69	90(102)	17.5	22	13	157.5(169.5)
80	M22 x 1.5	80	108(122)	20	28.5	14	188.5(202.5)
100	M26 x 1.5	100	108(122)	20	30	16	192(206)

Note) ( ): Denotes the dimensions for long stroke.

With Rod Boot

(mm)

Bore size (mm)	e	f	h	IJ	JH Reference	JW Reference	ℓ	Z	ZZ
20	30	18	55	27	15.5	10.5	0.25 stroke	67	130(138)
25	30	19	62	32	16.5	10.5		74	137.5(145.5)
32	35	19	62	38	18.5	10.5		75	139.5(147.5)
40	35	19	70	48	21.5	10.5		83.5	155(164)
50	40	19	78	59	24	10.5		95.5	177.5(189.5)
63	40	20	78	72	24	10.5		95.5	177.5(189.5)
80	52	10	80	59	—	—		104	197.5(211.5)
100	62	7	80	71	—	—		104	201(215)

∗ The minimum stroke with rod boot is 20 mm.

With Air Cushion

(mm)

Bore size (mm)	Rc, NPT, G P	WA	WB	WH	Wθ
20	M5 x 0.8	16	15(16)	23	30°
25	M5 x 0.8	16	15(16)	25	30°
32	1/8	16	15(16)	28.5	25°
40	1/8	16	15(16)	33	20°
50	1/4	18	17(18)	40.5	20°
63	1/4	18	17(18)	47.5	20°
80	3/8	22	22	60.5	20°
100	1/2	22	22	71	20°

Courtesy of Steven Engineering, Inc.-230 Ryan Way, South San Francisco, CA 94080-6370-Main Office: (650) 588-9200-Outside Local Area: (800) 258-9200-www.stevenengineering.com

Rod Side Flange Style: CG1F□

With rubber bumper

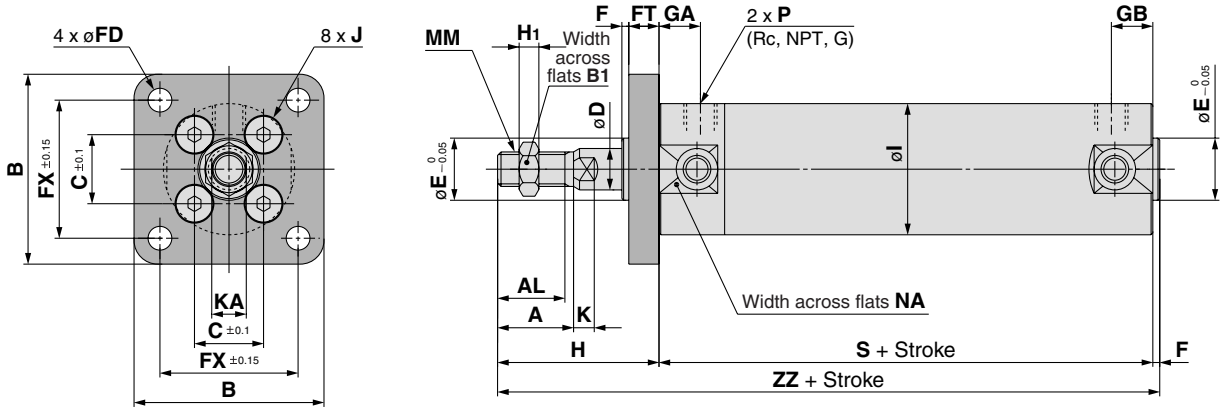

With rod boot

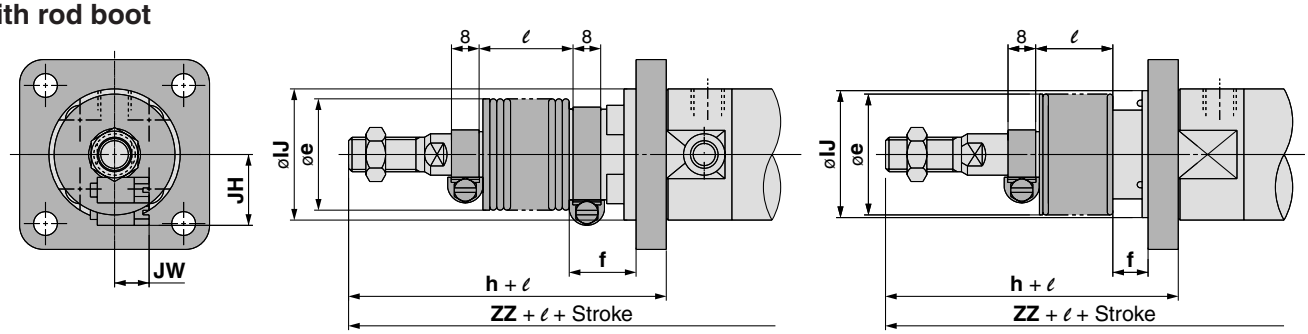

ø20 to ø63 ø80, ø100

With air cushion

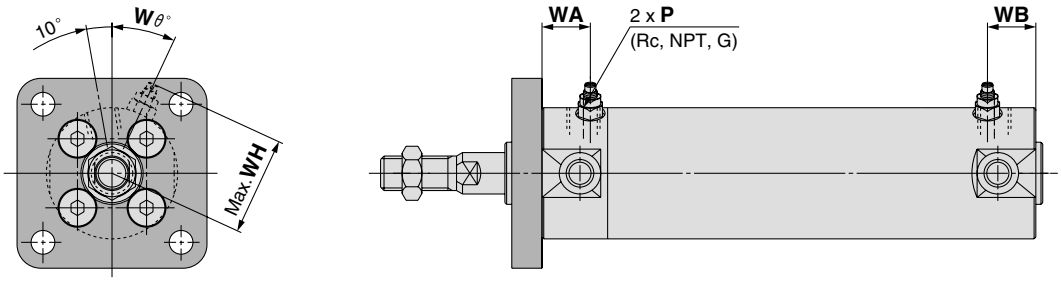

(mm)

Bore size (mm)	Stroke range (mm)		Rc, NPT port			G port			A	AL	B1	B	C	D	E	F	FX	FD	FT	H	H1	I	J	K	KA	MM
	Standard	Long stroke	GA	GB	P	GA	GB	P																		
20	Up to 200	201 to 350	12	10(12)	1/8	12	10(12)	M5 x 0.8	18	15.5	13	40	14	8	12	2	28	5.5	6	35	5	26	M4 x 0.7	5	6	M8 x 1.25
25	Up to 300	301 to 400	12	10(12)	1/8	12	10(12)	M5 x 0.8	22	19.5	17	44	16.5	10	14	2	32	5.5	7	40	6	31	M5 x 0.8	5.5	8	M10 x 1.25
32	Up to 300	301 to 450	12	10(12)	1/8	10	9(10)	1/8	22	19.5	17	53	20	12	18	2	38	6.6	7	40	6	38	M5 x 0.8	5.5	10	M10 x 1.25
40	Up to 300	301 to 800	13	10(13)	1/8	10	9(10)	1/8	30	27	19	61	26	16	25	2	46	6.6	8	50	8	47	M6 x 1	6	14	M14 x 1.5
50	Up to 300	301 to 1200	14	12(14)	1/4	12	11(12)	1/4	35	32	27	76	32	20	30	2	58	9	9	58	11	58	M8 x 1.25	7	18	M18 x 1.5
63	Up to 300	301 to 1200	14	12(14)	1/4	12	11(12)	1/4	35	32	27	92	38	20	32	2	70	11	9	58	11	72	M10 x 1.5	7	18	M18 x 1.5
80	Up to 300	301 to 1400	20	16(20)	3/8	17	16(17)	3/8	40	37	32	104	50	25	40	3	82	11	11	71	13	89	M10 x 1.5	10	22	M22 x 1.5
100	Up to 300	301 to 1500	20	16(20)	1/2	17	16(17)	1/2	40	37	41	128	60	30	50	3	100	14	14	71	16	110	M12 x 1.75	10	26	M26 x 1.5

(mm)

Bore size (mm)	NA	S	ZZ
20	24	69(77)	106(114)
25	29	69(77)	111(119)
32	35.5	71(79)	113(121)
40	44	78(87)	130(139)
50	55	90(102)	150(162)
63	69	90(102)	150(162)
80	80	108(122)	182(196)
100	100	108(122)	182(196)

Note) ( ): Denotes the dimensions for long stroke.

With Rod Boot

(mm)

Bore size (mm)	e	f	h	IJ	JH (Reference)	JW (Reference)	ℓ	ZZ
20	30	18	55	27	15.5	10.5	0.25 stroke	126(134)
25	30	19	62	32	16.5	10.5		133(141)
32	35	19	62	38	18.5	10.5		135(143)
40	35	19	70	48	21.5	10.5		150(159)
50	40	19	78	59	24	10.5		170(182)
63	40	20	78	72	24	10.5		170(182)
80	52	10	80	59	—	—		191(205)
100	62	7	80	71	—	—		191(205)

∗ The minimum stroke with rod boot is 20 mm.

With Air Cushion

(mm)

Bore size (mm)	Rc, NPT, G P	WA	WB	WH	Wθ
20	M5 x 0.8	16	15(16)	23	30°
25	M5 x 0.8	16	15(16)	25	30°
32	1/8	16	15(16)	28.5	25°
40	1/8	16	15(16)	33	20°
50	1/4	18	17(18)	40.5	20°
63	1/4	18	17(18)	47.5	20°
80	3/8	22	22	60.5	20°
100	1/2	22	22	71	20°

SMC
Courtesy of Steven Engineering, Inc.-230 Ryan Way, South San Francisco, CA 94080-6370-Main Office: (650) 588-9200-Outside Local Area: (800) 258-9200-www.stevenengineering.com

Head Side Flange Style:CG1G□

With rubber bumper

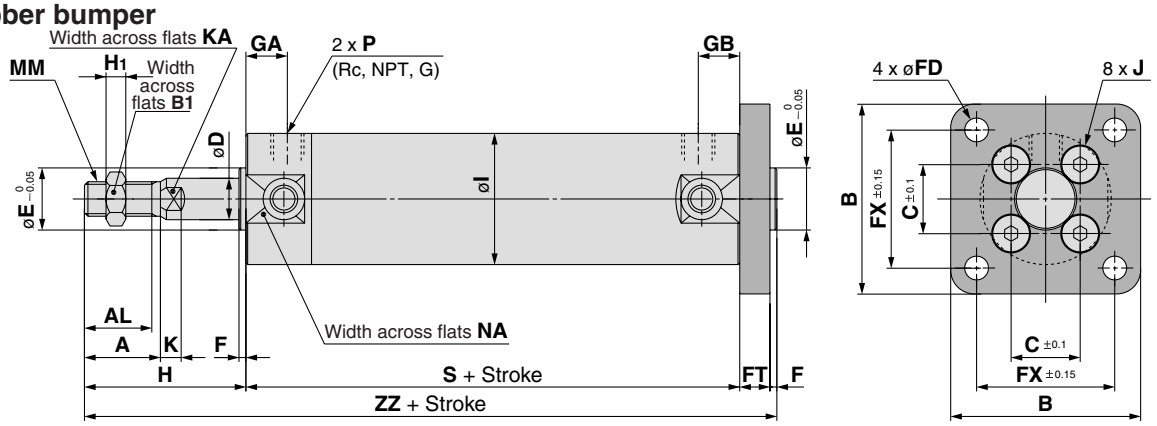

With rod boot

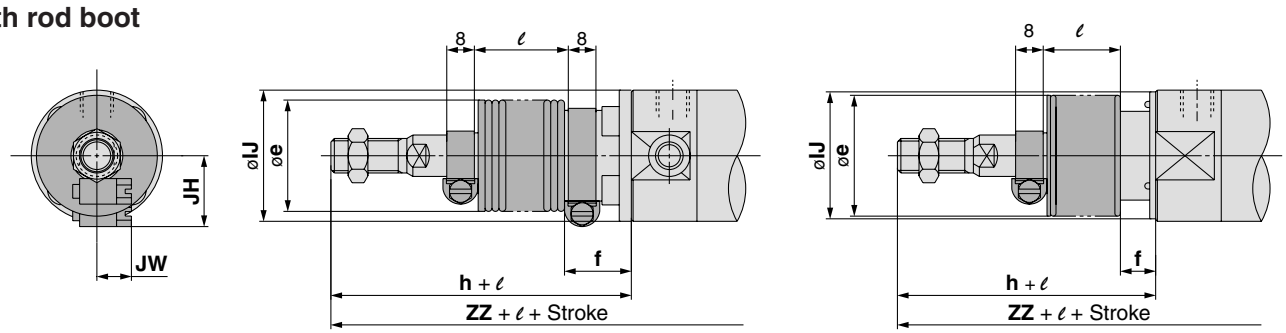

ø20 to ø63 ø80, ø100

With air cushion

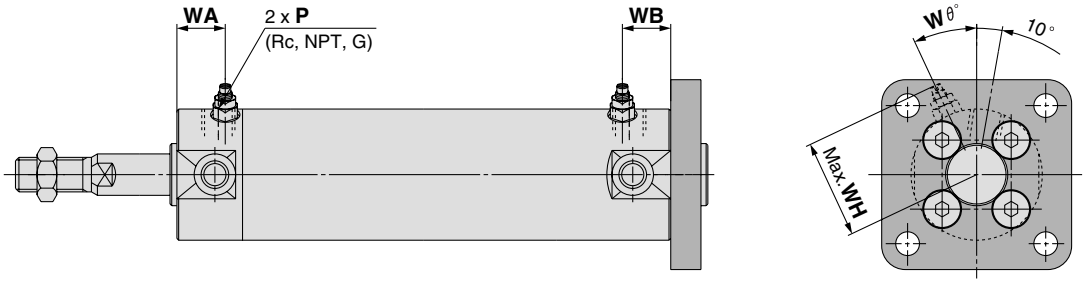

(mm)

Bore size (mm)	Stroke range (mm) Standard	Stroke range (mm) Long stroke	Rc, NPT port GA	Rc, NPT port GB	Rc, NPT port P	G port GA	G port GB	G port P	A	AL	B1	B	C	D	E	F	FX	FD	FT	H	H1	I	J	K	KA	MM
20	Up to 200	—	12	10	1/8	12	10	M5 x 0.8	18	15.5	13	40	14	8	12	2	28	5.5	6	35	5	26	M4 x 0.7	5	6	M8 x 1.25
25	Up to 300	—	12	10	1/8	12	10	M5 x 0.8	22	19.5	17	44	16.5	10	14	2	32	5.5	7	40	6	31	M5 x 0.8	5.5	8	M10 x 1.25
32	Up to 300	—	12	10	1/8	10	9	1/8	22	19.5	17	53	20	12	18	2	38	6.6	7	40	6	38	M5 x 0.8	5.5	10	M10 x 1.25
40	Up to 300	301 to 500	13	10(13)	1/8	10	9(10)	1/8	30	27	19	61	26	16	25	2	46	6.6	8	50	8	47	M6 x 1	6	14	M14 x 1.5
50	Up to 300	301 to 600	14	12(14)	1/4	12	11(12)	1/4	35	32	27	76	32	20	30	2	58	9	9	58	11	58	M8 x 1.25	7	18	M18 x 1.5
63	Up to 300	301 to 600	14	12(14)	1/4	12	11(12)	1/4	35	32	27	92	38	20	32	2	70	11	9	58	11	72	M10 x 1.5	7	18	M18 x 1.5
80	Up to 300	301 to 750	20	16(20)	3/8	17	16(17)	3/8	40	37	32	104	50	25	40	3	82	11	11	71	13	89	M10 x 1.5	10	22	M22 x 1.5
100	Up to 300	301 to 750	20	16(20)	1/2	17	16(17)	1/2	40	37	41	128	60	30	50	3	100	14	14	71	16	110	M12 x 1.75	10	26	M26 x 1.5

(mm)

Bore size (mm)	NA	S	ZZ
20	24	69	112
25	29	69	118
32	35.5	71	120
40	44	78(87)	138(147)
50	55	90(102)	159(171)
63	69	90(102)	159(171)
80	80	108(122)	193(207)
100	100	108(122)	196(210)

Note) ( ): Denotes the dimensions for long stroke.

With Rod Boot

(mm)

Bore size (mm)	e	f	h	IJ	JH (Reference)	JW (Reference)	ℓ	ZZ
20	30	18	55	27	15.5	10.5	0.25 stroke	132
25	30	19	62	32	16.5	10.5		140
32	35	19	62	38	18.5	10.5		142
40	35	19	70	48	21.5	10.5		158(167)
50	40	19	78	59	24	10.5		179(191)
63	40	20	78	72	24	10.5		179(191)
80	52	10	80	59	—	—		202(216)
100	62	7	80	71	—	—		205(219)

∗ The minimum stroke with rod boot is 20 mm.

With Air Cushion

(mm)

Bore size (mm)	Rc, NPT, G P	WA	WB	WH	Wθ
20	M5 x 0.8	16	15	23	30°
25	M5 x 0.8	16	15	25	30°
32	1/8	16	15	28.5	25°
40	1/8	16	15(16)	33	20°
50	1/4	18	17(18)	40.5	20°
63	1/4	18	17(18)	47.5	20°
80	3/8	22	22	60.5	20°
100	1/2	22	22	71	20°

Courtesy of Steven Engineering, Inc.-230 Ryan Way, South San Francisco, CA 94080-6370-Main Office: (650) 588-9200-Outside Local Area: (800) 258-9200-www.stevenengineering.com

Rod Side Trunnion Style:CG1U□

With rubber bumper

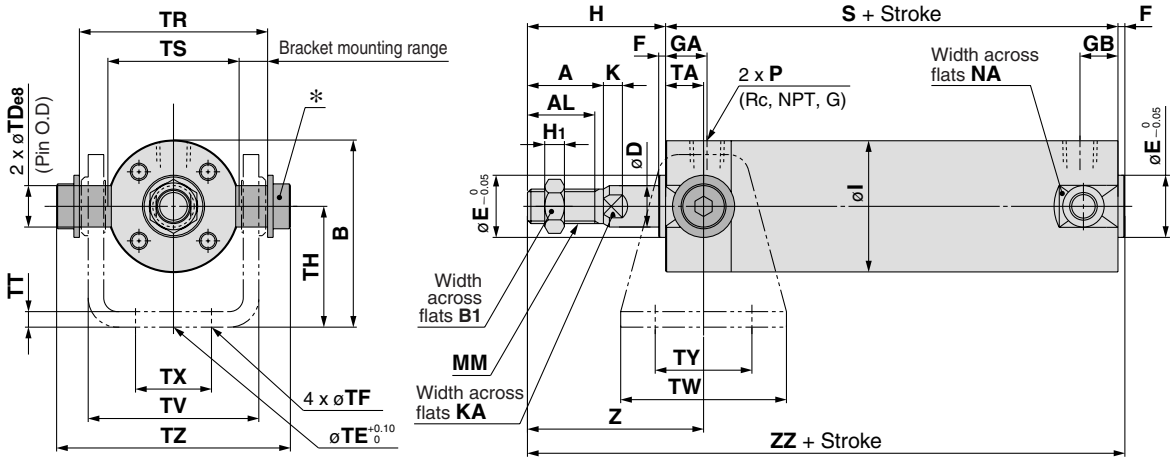

∗ Consists of pins, flat washers and hexagon socket head cap bolts.

With rod boot

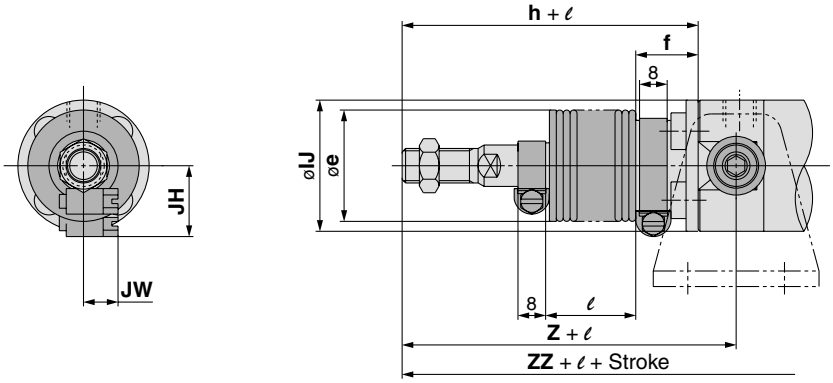

With air cushion

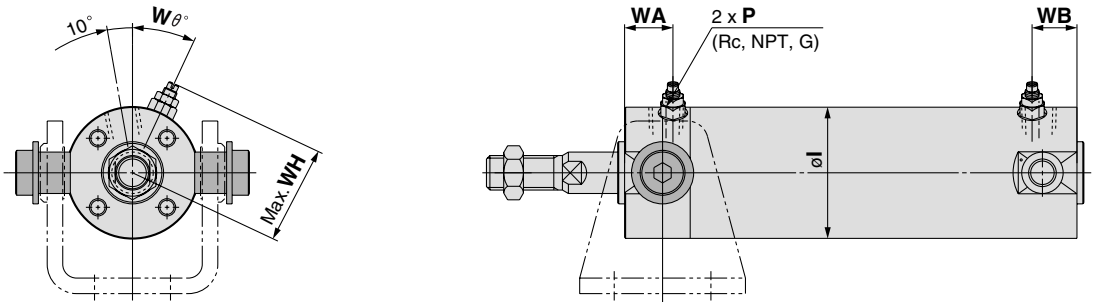

(mm)

Bore size (mm)	Stroke range (mm) Standard	Long stroke	Rc, NPT port GA	GB	P	G port GA	GB	P	A	AL	B	B1	D	E	F	H	H1	I	K	KA	MM	NA	S	TA	TDe8	TE	TF
20	Up to 200	–	12	10	1/8	12	10	M5 x 0.8	18	15.5	38	13	8	12	2	35	5	26	5	6	M8 x 1.25	24	69	11	$8^{-0.025}_{-0.047}$	10	5.5
25	Up to 300	–	12	10	1/8	12	10	M5 x 0.8	22	19.5	45.5	17	10	14	2	40	6	31	5.5	8	M10 x 1.25	29	69	11	$10^{-0.025}_{-0.047}$	10	5.5
32	Up to 300	–	12	10	1/8	10	9	1/8	22	19.5	54	17	12	18	2	40	6	38	5.5	10	M10 x 1.25	35.5	71	11	$12^{-0.032}_{-0.059}$	10	6.6
40	Up to 300	301 to 500	13	10(13)	1/8	10	9(10)	1/8	30	27	63.5	19	16	25	2	50	8	47	6	14	M14 x 1.5	44	78(87)	12	$14^{-0.032}_{-0.059}$	10	6.6
50	Up to 300	301 to 600	14	12(14)	1/4	12	11(12)	1/4	35	32	79	27	20	30	2	58	11	58	7	18	M18 x 1.5	55	90(102)	13	$16^{-0.032}_{-0.059}$	20	9
63	Up to 300	301 to 600	14	12(14)	1/4	12	11(12)	1/4	35	32	96	27	20	32	2	58	11	72	7	18	M18 x 1.5	69	90(102)	13	$18^{-0.032}_{-0.059}$	20	11

(mm)

Bore size (mm)	TH	TR	TS	TT	TV	TW	TX	TY	TZ	Z	ZZ
20	25	39	28	3.2	(35.8)	42	16	28	47.6	46	106
25	30	43	33	3.2	(39.8)	42	20	28	53	51	111
32	35	54.5	40	4.5	(49.4)	48	22	28	67.7	51	113
40	40	65.5	49	4.5	(58.4)	56	30	30	78.7	62	130(139)
50	50	80	60	6	(72.4)	64	36	36	98.6	71	150(162)
63	60	98	74	8	(90.4)	74	46	46	119.2	71	150(162)

Note) ( ): Denotes the dimensions for long stroke.
Refer to page 237 for pivot bracket.

With Rod Boot

(mm)

Bore size (mm)	e	f	h	IJ	JH (Reference)	JW (Reference)	ℓ	Z	ZZ
20	30	18	55	27	15.5	10.5	0.25 stroke	66	126
25	30	19	62	32	16.5	10.5		73	133
32	35	19	62	38	18.5	10.5		73	135
40	35	19	70	48	21.5	10.5		82	150(159)
50	40	19	78	59	24	10.5		91	170(182)
63	40	20	78	72	24	10.5		91	170(182)

∗ The minimum stroke with rod boot is 20 mm.

With Air Cushion

(mm)

Bore size (mm)	Rc, NPT, G P	WA	WB	WH	Wθ
20	M5 x 0.8	16	15	23	30°
25	M5 x 0.8	16	15	25	30°
32	1/8	16	15	28.5	25°
40	1/8	16	15(16)	33	20°
50	1/4	18	17(18)	40.5	20°
63	1/4	18	17(18)	47.5	20°

SMC
Courtesy of Steven Engineering, Inc.-230 Ryan Way, South San Francisco, CA 94080-6370-Main Office: (650) 588-9200-Outside Local Area: (800) 258-9200-www.stevenengineering.com

Head Side Trunnion Style: CG1T□

With rubber bumper

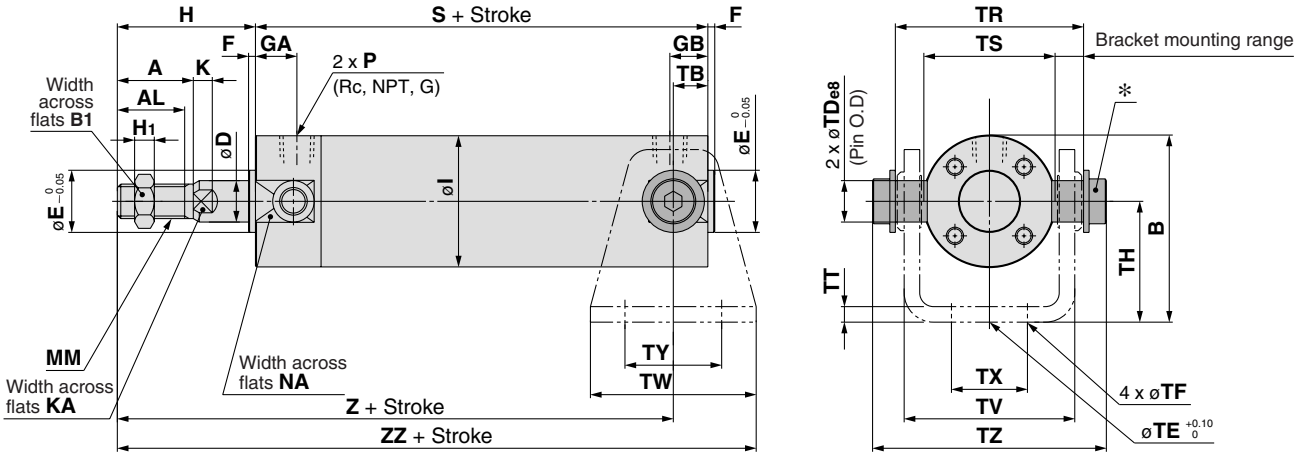

∗ Consists of pins, flat washers and hexagon socket head cap bolts.

With rod boot

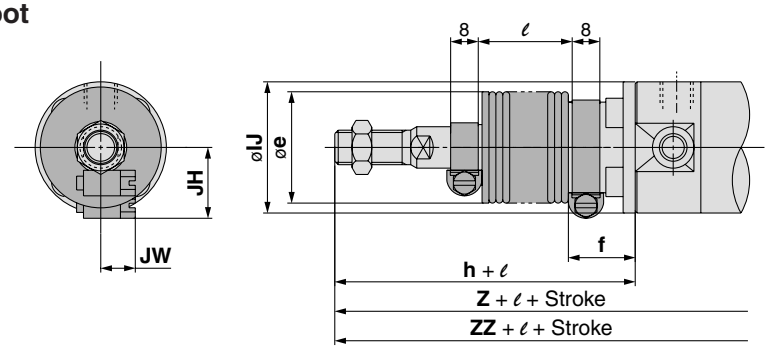

With air cushion

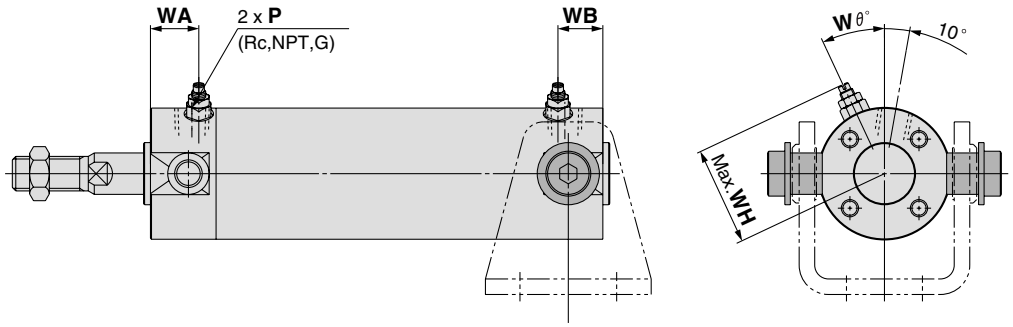

(mm)

Bore size (mm)	Stroke range (mm) Standard	Stroke range (mm) Long stroke	Rc, NPT port GA	Rc, NPT port GB	Rc, NPT port P	G port GA	G port GB	G port P	A	AL	B	B1	D	E	F	H	H1	I	K	KA	MM	NA	S	TB	TDe8	TE	TF	TH	TR
20	Up to 200	–	12	10(12)	1/8	12	10(12)	M5 x 0.8	18	15.5	38	13	8	12	2	35	5	26	5	6	M8 x 1.25	24	69	11	$8^{-0.025}_{-0.047}$	10	5.5	25	39
25	Up to 300	–	12	10(12)	1/8	12	10(12)	M5 x 0.8	22	19.5	45.5	17	10	14	2	40	6	31	5.5	8	M10 x 1.25	29	69	11	$10^{-0.025}_{-0.047}$	10	5.5	30	43
32	Up to 300	–	12	10(12)	1/8	10	9(10)	1/8	22	19.5	54	17	12	18	2	40	6	38	5.5	10	M10 x 1.25	35.5	71	10	$12^{-0.032}_{-0.059}$	10	6.6	35	54.5
40	Up to 300	301 to 500	13	10(13)	1/8	10	9(10)	1/8	30	27	63.5	19	16	25	2	50	8	47	6	14	M14 x 1.5	44	78(87)	10(12)	$14^{-0.032}_{-0.059}$	10	6.6	40	65.5
50	Up to 300	301 to 600	14	12(14)	1/4	12	11(12)	1/4	35	32	79	27	20	30	2	58	11	58	7	18	M18 x 1.5	55	90(102)	12(13)	$16^{-0.032}_{-0.059}$	20	9	50	80
63	Up to 300	301 to 600	14	12(14)	1/4	12	11(12)	1/4	35	32	96	27	20	32	2	58	11	72	7	18	M18 x 1.5	69	90(102)	12(13)	$18^{-0.032}_{-0.059}$	20	11	60	98

(mm)

Bore size (mm)	TS	TT	TV	TW	TX	TY	TZ	Z	ZZ
20	28	3.2	(35.8)	42	16	28	47.6	93	114
25	33	3.2	(39.8)	42	20	28	53	98	119
32	40	4.5	(49.4)	48	22	28	67.7	101	125
40	49	4.5	(58.4)	56	30	30	78.7	118(125)	146(153)
50	60	6	(72.4)	64	36	36	98.6	136(147)	168(179)
63	74	8	(90.4)	74	46	46	119.2	136(147)	178(184)

Note) ( ): Denotes the dimensions for long stroke.
Refer to page 237 for pivot bracket.

With Rod Boot

(mm)

Bore size (mm)	e	f	h	IJ	JH (Reference)	JW (Reference)	ℓ	Z	ZZ
20	30	18	55	27	15.5	10.5	0.25 stroke	113	134
25	30	19	62	32	16.5	10.5		120	141
32	35	19	62	38	18.5	10.5		123	147
40	35	19	70	48	21.5	10.5		138(145)	166(173)
50	40	19	78	59	24	10.5		156(167)	188(199)
63	40	20	78	72	24	10.5		156(167)	198(204)

∗ The minimum stroke with rod boot is 20 mm.

With Air Cushion

(mm)

Bore size (mm)	Rc, NPT, G P	WA	WB	WH	Wθ
20	M5 x 0.8	16	15	23	30°
25	M5 x 0.8	16	15	25	30°
32	1/8	16	15	28.5	25°
40	1/8	16	15(16)	33	20°
50	1/4	18	17(18)	40.5	20°
63	1/4	18	17(18)	47.5	20°

Courtesy of Steven Engineering, Inc.-230 Ryan Way, South San Francisco, CA 94080-6370-Main Office: (650) 588-9200-Outside Local Area: (800) 258-9200-www.stevenengineering.com

Clevis Style:CG1D□ (ø20 to ø63)

With rubber bumper

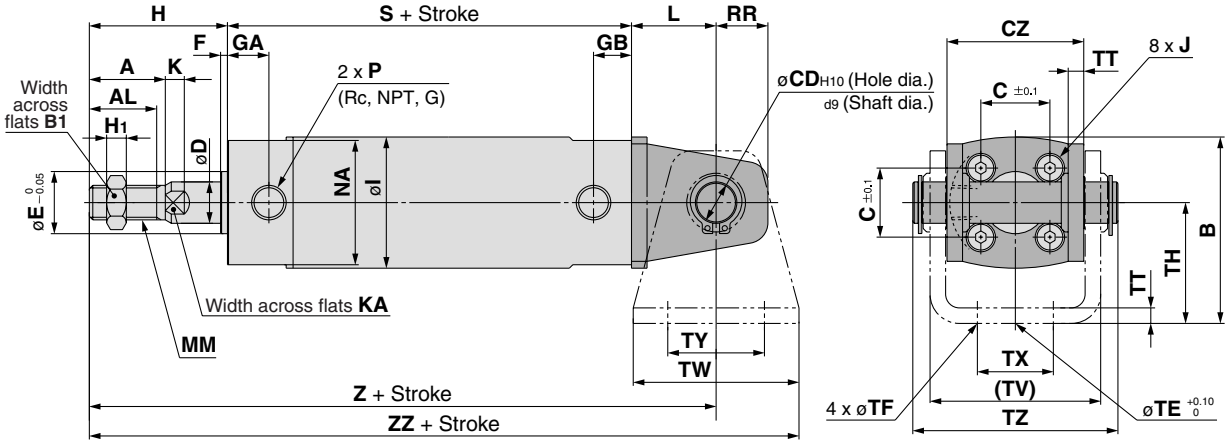

∗ The above shows the case port location is changed by 90°

With rod boot

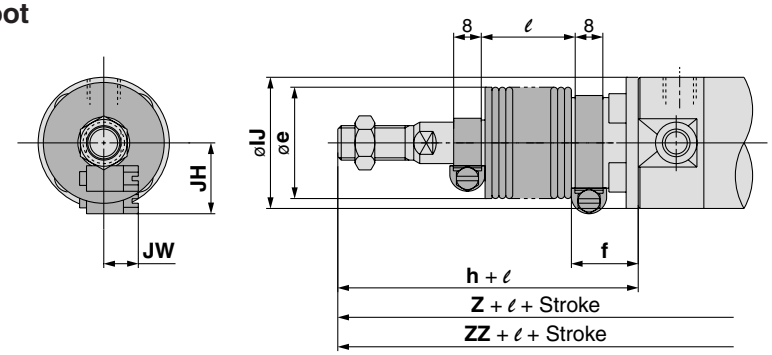

With air cushion

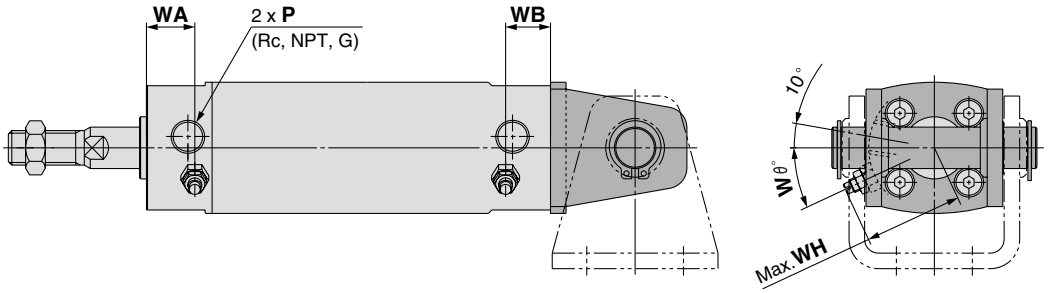

(mm)

Bore size (mm)	Stroke range (mm) Standard	Stroke range (mm) Long stroke	Rc, NPT port GA	Rc, NPT port GB	Rc, NPT port P	G port GA	G port GB	G port P	A	AL	B1	C	CD	CZ	D	E	F	H	H1	I	J	K	KA	MM	NA	RR	S	L	TE	TF
20	Up to 200	–	12	10	1/8	12	10	M5 x 0.8	18	15.5	13	14	8	29	8	12	2	35	5	26	M4 x 0.7	5	6	M8 x 1.25	24	11	69	14	10	5.5
25	Up to 300	–	12	10	1/8	12	10	M5 x 0.8	22	19.5	17	16.5	10	33	10	14	2	40	6	31	M5 x 0.8	5.5	8	M10 x 1.25	29	13	69	16	10	5.5
32	Up to 300	–	12	10	1/8	10	9	1/8	22	19.5	17	20	12	40	12	18	2	40	6	38	M5 x 0.8	5.5	10	M10 x 1.25	35.5	15	71	20	10	6.6
40	Up to 300	301 to 500	13	10(13)	1/8	10	9(10)	1/8	30	27	19	26	14	49	16	25	2	50	8	47	M6 x 1	6	14	M14 x 1.5	44	18	78(87)	22	10	6.6
50	Up to 300	301 to 600	14	12(14)	1/4	12	11(12)	1/4	35	32	27	32	16	60	20	30	2	58	11	58	M8 x 1.25	7	18	M18 x 1.5	55	20	90(102)	25	20	9
63	Up to 300	301 to 600	14	12(14)	1/4	12	11(12)	1/4	35	32	27	38	18	74	20	32	2	58	11	72	M10 x 1.5	7	18	M18 x 1.5	69	22	90(102)	30	20	11

(mm)

Bore size (mm)	TH	TT	TV	TW	TX	TY	TZ	Z	ZZ	Applicable pin part no.
20	25	3.2	35.8	42	16	28	43.4	118	139	CD-G02
25	30	3.2	39.8	42	20	28	48	125	146	CD-G25
32	35	4.5	49.4	48	22	28	59.4	131	155	CD-G03
40	40	4.5	58.4	56	30	30	71.4	150(159)	178(187)	CD-G04
50	50	6	72.4	64	36	36	86	173(185)	205(217)	CD-G05
63	60	8	90.4	74	46	46	105.4	178(190)	215(227)	CD-G06

Note) ( ): Denotes the dimensions for long stroke.
Refer to page 237 for pivot bracket.

With Rod Boot

(mm)

Bore size (mm)	e	f	h	IJ	JH (Reference)	JW (Reference)	ℓ	Z	ZZ
20	30	18	55	27	15.5	10.5	0.25 stroke	138	159
25	30	19	62	32	16.5	10.5		147	168
32	35	19	62	38	18.5	10.5		153	177
40	35	19	70	48	21.5	10.5		170(179)	198(207)
50	40	19	78	59	24	10.5		193(205)	225(237)
63	40	20	78	72	24	10.5		198(210)	235(247)

∗ The minimum stroke with rod boot is 20 mm.

With Air Cushion

(mm)

Bore size (mm)	Rc, NPT, G P	WA	WB	WH	Wθ
20	M5 x 0.8	16	15	23	30°
25	M5 x 0.8	16	15	25	30°
32	1/8	16	15	28.5	25°
40	1/8	16	15(16)	33	20°
50	1/4	18	17(18)	40.5	20°
63	1/4	18	17(18)	47.5	20°

SMC
Courtesy of Steven Engineering, Inc.-230 Ryan Way, South San Francisco, CA 94080-6370-Main Office: (650) 588-9200-Outside Local Area: (800) 258-9200-www.stevenengineering.com

Clevis Style:CG1D□(ø80, ø100)

With rubber bumper

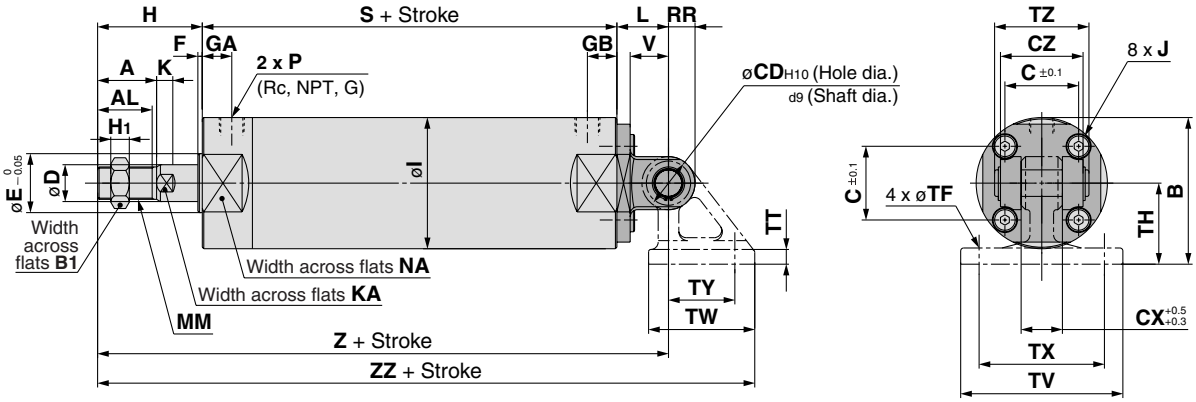

With rod boot

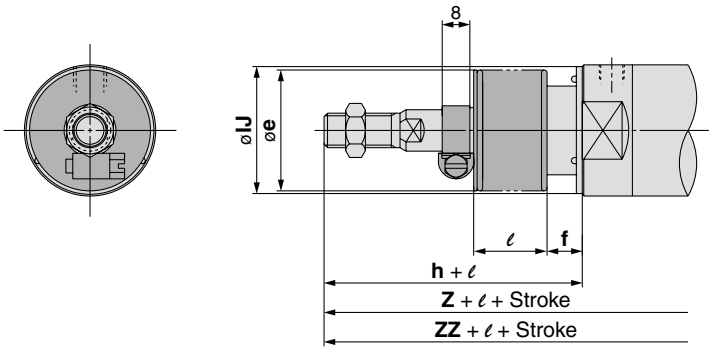

With air cushion

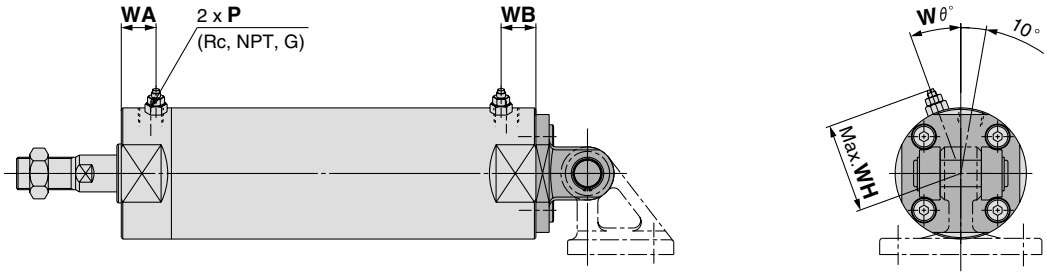

(mm)

Bore size (mm)	Stroke range (mm)		Rc, NPT port			G port			A	AL	B	B1	C	CD	CX	CZ	D	E	F	H	H1	I	J	K	KA	L
	Standard	Long stroke	GA	GB	P	GA	GB	P																		
80	Up to 300	301 to 750	20	16 (20)	3/8	17	16 (17)	3/8	40	37	99.5	32	50	18	28	56	25	40	3	71	13	89	M10 x 1.5	10	22	35
100	Up to 300	301 to 750	20	16 (20)	1/2	17	16 (17)	1/2	40	37	120	41	60	22	32	64	30	50	3	71	16	110	M12 x 1.75	10	26	43

(mm)

Bore size (mm)	MM	NA	RR	S	TF	TH	TT	TV	TW	TX	TY	TZ	V	Z	ZZ	Applicable pin part no.
80	M22 x 1.5	80	18	108 (122)	11	55	11	110	72	85	45	64	26	214 (228)	272.5 (286.5)	IY-G08
100	M26 x 1.5	100	22	108 (122)	13.5	65	12	130	93	100	60	72	32	222 (230)	298.5 (312.5)	IY-G10

Note) ( ): Denotes the dimensions for long stroke. Refer to page 237 for pivot bracket.

With Rod Boot

(mm)

Bore size (mm)	e	f	h	IJ	ℓ	Z	ZZ
80	52	10	80	59	0.25 stroke	223 (237)	281.5 (295.5)
100	62	7	80	71		231 (245)	307.5 (321.5)

∗ The minimum stroke with rod boot is 20 mm.

With Air Cushion

(mm)

Bore size (mm)	Rc, NPT, G P	WA	WB	WH	Wθ
80	3/8	22	22	60.5	20°
100	1/2	22	22	71	20°

Courtesy of Steven Engineering, Inc.-230 Ryan Way, South San Francisco, CA 94080-6370-Main Office: (650) 588-9200-Outside Local Area: (800) 258-9200-www.stevenengineering.com