Part Number: 87439-0401
Status: Active
Overview: Pico-SPOX™ Wire-to-Board Connector System
Description: 1.50mm Pitch Pico-SPOX™ Wire-to-Board Housing, 4 Circuits, Black Housing

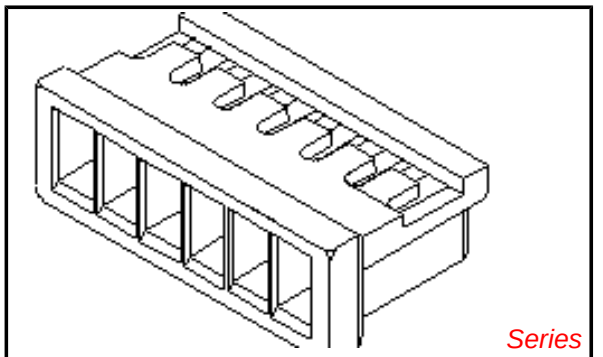

image - Reference only

Documents:
3D Model
Drawing (PDF)
Product Specification PS-87437-001 (PDF)
RoHS Certificate of Compliance (PDF)

Agency Certification

CSA	LR19980
UL	E29179

General

Product Family	Crimp Housings
Series	87439
Application	Signal, Wire-to-Board
Overview	Pico-SPOX™ Wire-to-Board Connector System
Product Name	Pico-SPOX™
UPC	822350140676

Physical

Circuits (maximum)	4
Color - Resin	Natural
Flammability	94V-0
Gender	Female
Glow-Wire Compliant	No
Lock to Mating Part	Yes
Material - Resin	Nylon
Net Weight	0.055/g
Number of Rows	1
Packaging Type	Bag
Panel Mount	No
Pitch - Mating Interface	1.50mm
Polarized to Mating Part	Yes
Stackable	No
Temperature Range - Operating	-55°C to +105°C

Electrical

Current - Maximum per Contact	2.5A

Material Info

Reference - Drawing Numbers

Product Specification	PS-87437-001, RPS-87437
Sales Drawing	SD-87439-001

EU RoHS
ELV and RoHS Compliant
REACH SVHC
Contains SVHC: No
Low-Halogen Status
Low-Halogen

China RoHS

Need more information on product environmental compliance?

Email productcompliance@molex.com
For a multiple part number RoHS Certificate of Compliance, click here

Please visit the Contact Us section for any non-product compliance questions.

Search Parts in this Series
87439Series

Mates With
Pico-SPOX™ Wire-to-Board Header 87437 , 87438

Use With
87421 Pico-SPOX™ Crimp Terminal

Mouser Electronics

Authorized Distributor

Click to View Pricing, Inventory, Delivery & Lifecycle Information:

Molex:
87439-0401