⚠Note • This PDF catalog is downloaded from the website of Murata Manufacturing co., ltd. Therefore, it's specifications are subject to change or our products in it may be discontinued without advance notice. Please check with our sales representatives or product engineers before ordering.
• This PDF catalog has only typical specifications because there is no space for detailed specifications. Therefore, please approve our product specifications or transact the approval sheet for product specifications before ordering.

Piezoelectric Sound Components

Piezoelectric Sounders External Drive SMD Type

Taking advantage of extensive acoustic and mechanical design technology and high performance ceramics, Murata has developed SMD piezoelectric sounders that suit the thin, high-density design of electronic equipment.

■ Features

1. Small, thin and lightweight
2. High sound pressure level and clear sound
3. Reflowable
4. Tape & Reel supply

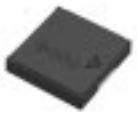

PKLCS1212E2000-R1

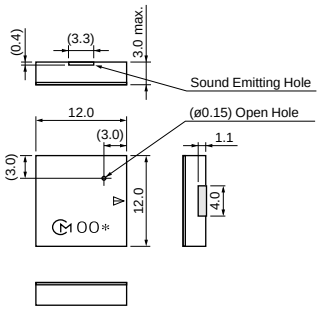

( ) : Ref. only
(in mm)
Tol. ±0.2

PKLCS1212E4001-R1

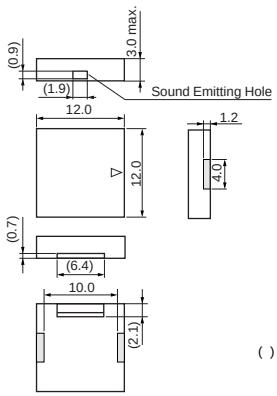

( ) : Ref. only
(in mm)
Tol. ±0.2

Part Number	Sound Pressure Level (dB)	Operating Voltage Range (Vp-p)	Operating Temp. Range (°C)	Storage Temp. Range (°C)	Use
PKLCS1212E2000-R1	70 min.[3Vp-p,2kHz,square wave,10cm]	25 max.	-20 to +70	-30 to +80	For consumer electronics
PKLCS1212E20A0-R1	70 min.[3Vp-p,2kHz,square wave,10cm]	25 max.	-40 to +85	-40 to +85	For automotive electronics
PKLCS1212E4001-R1	75 min.[3Vp-p,4kHz,square wave,10cm]	25 max.	-20 to +70	-30 to +80	For consumer electronics
PKLCS1212E40A1-R1	75 min.[3Vp-p,4kHz,square wave,10cm]	25 max.	-40 to +85	-40 to +85	For automotive electronics

■ Standard Land Pattern Dimensions

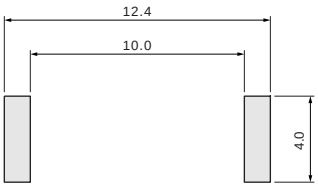

(in mm)

⚠Note • This PDF catalog is downloaded from the website of Murata Manufacturing co., ltd. Therefore, it's specifications are subject to change or our products in it may be discontinued without advance notice. Please check with our sales representatives or product engineers before ordering.
• This PDF catalog has only typical specifications because there is no space for detailed specifications. Therefore, please approve our product specifications or transact the approval sheet for product specifications before ordering.

■ Freq. Response (Square Wave 3Vp-p, 10cm)

PKLCS1212E2000-R1

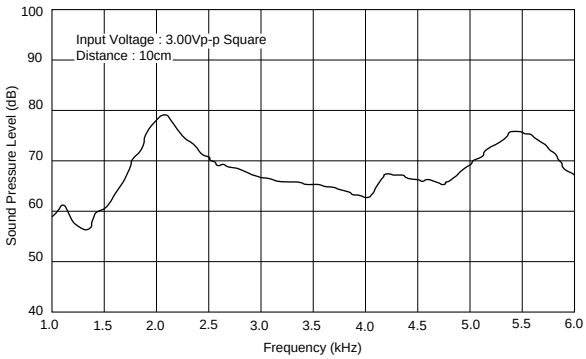

PKLCS1212E4001-R1

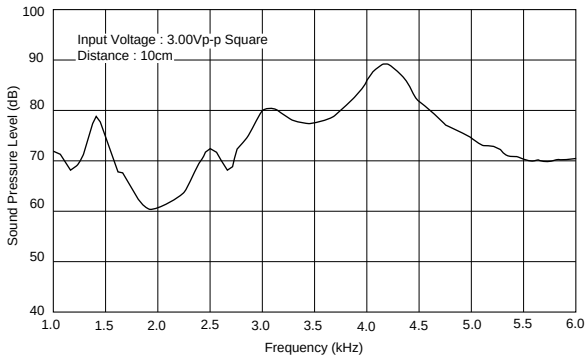

■ Taping Dimension

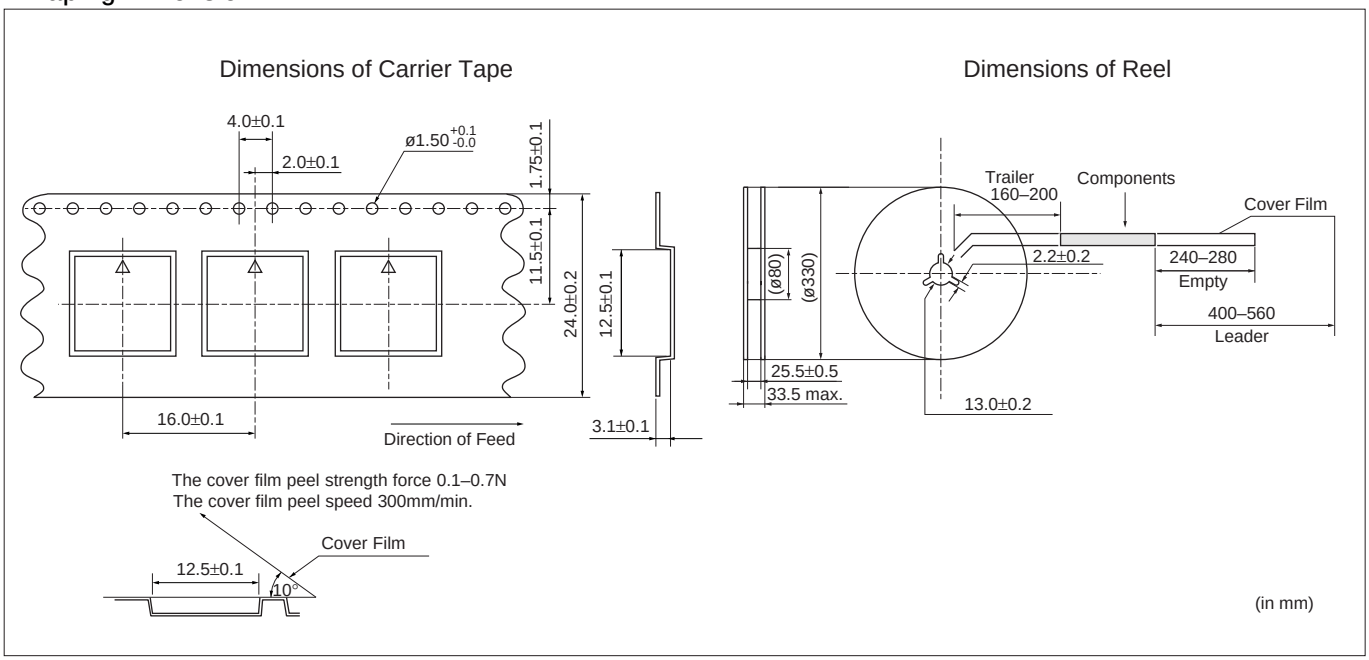

5

⚠Note • This PDF catalog is downloaded from the website of Murata Manufacturing co., ltd. Therefore, it's specifications are subject to change or our products in it may be discontinued without advance notice. Please check with our sales representatives or product engineers before ordering.
• This PDF catalog has only typical specifications because there is no space for detailed specifications. Therefore, please approve our product specifications or transact the approval sheet for product specifications before ordering.

Piezoelectric Sounders (External Drive SMD Type) Circuit/Notice

■ Circuit

The following are examples of externally driven circuits.
(1) Unstable multi-vibrator using Tr.
(2) Circuits using inverters or NAND gates.

(1)

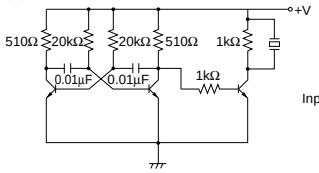

(2)

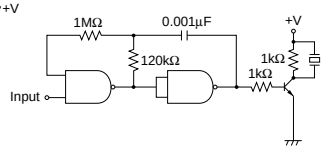

■ Notice (Soldering and Mounting)

Washing of the component is not acceptable, because it is not sealed.

■ Notice (Handling)

1. The component may be damaged if mechanical stress exceeding specifications is applied.
2. Take care to protect operating circuit from surge voltage resulting from excessive force, falling, shock or temperature change.
3. If DC voltage is applied to the component, silver migration may occur. Please pay full attention to avoid subjecting the component to DC voltage for long periods.
4. The resistor should be used as shown in Fig. A.
   A suitable resistance value should be chosen, preferably 1kΩ to 2kΩ. Instead of this measure, a diode may also be applied as shown in Fig. B.

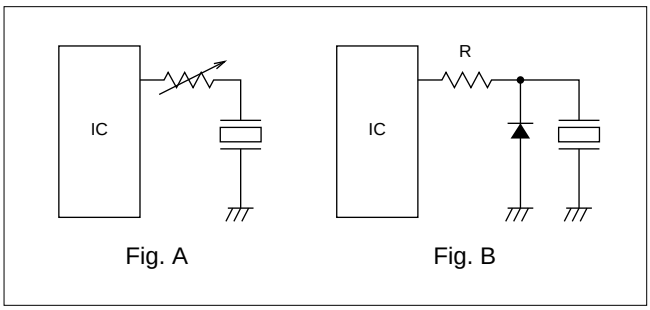

Fig. A Fig. B

5. Avoid excessive pulling of lead wire because wire may break or soldering point may come off.

Piezoelectric Sounders/Piezoelectric Buzzers/Piezoelectric Ringers (PIEZORINGER®)

(Part Number) **PK** **M** **13** **E** **P** **YH** **40** **00** **P** **-A0**
❶ ❷ ❸ ❹ ❺ ❻ ❼ ❽ ❾ ❿

❶Product ID

Product ID	
PK	Piezoelectric Sound Components

❷Product

Code	Product
M	Sounder, Ringer
B	Buzzer

❸Outer Dimensions

Expressed by two figures in mm.

Ex.)

Code	Outer Dimensions
13	ø12.6mm

❹Drive

Code	Drive
E	External-Drive
S	Self-Drive

❺Outer Electrode Style

Code	Outer Electrode Style
P	Pin Type
W	Lead Wire Type

❻Structure

Code	Structure
T☐	Standing Type
P☐	Flat Type Auto-assemble
Y☐	Flat Type/Available for Taping
C☐	Flat Type/Semi-auto-assemble
☐	Exclude above mentioned

☐ means specification of outer electrode.

❼Oscillating Frequency Type

Code	Oscillating Frequency Type
40	Expressed resonant frequency by two-digit alphanumerics. The unit is in 100 hertz (Hz). In case of 4kHz (4000Hz), expressed as "40".

❽Individual Specification Code

Code	Individual Specification Code
00	Two digits express custom specification in characteristics.

❾Special Quality Guarantee

Code	Special Quality Guarantee
P	Post Plated Terminal
—	Blank

❿Packaging

Code	Packaging
-B0	Bulk
-A0	Radial Taping
-M0	Magazine

Radial taping or magazines are not available for all types.
Please contact us.
Packaging Code is blank in the case of types for which radial taping or magazines are not available.

SMD Piezoelectric Sounder

(Part Number) **PK** **LCS** **1212** **E** **40** **01** **-R1**
❶ ❷ ❸ ❹ ❺ ❻ ❼

❶Product ID

Product ID	
PK	Piezoelectric Sound Components

❷Product

Code	Product
LCS	SMD Sounder

❸Dimensions

Code	Outer Dimensions
1212	☐12mm

❹Drive

Code	Drive
E	External Drive

❺Oscillating Frequency Type

Code	Oscillating Frequency Type
40	Expressed resonant frequency by two-digit alphanumerics. The unit is in 100 hertz (Hz). In case of 4kHz (4000Hz), expressed as "40".

❻Individual Specification Code

Code	Individual Specification Code
01	Two digits express specific specification in characteristics.

❼Packaging

Code	Packaging
-R1	Plastic taping

Mouser Electronics

Authorized Distributor

Click to View Pricing, Inventory, Delivery & Lifecycle Information:

Murata:

PKLCS1212E4001-R1 PKLCS1212E40A1-R1 PKLCS1212E20A0-R1 PKLCS1212E2400-R1 PKLCS1212E24A0-R1 PKLCS1212E2000-R1