Part Number: 90170-0016
Status: Active
Overview: QF-50™
Description: 2.54mm Pitch QF-50™, Strain Relief, DIN 41651, Standard Low Profile, 16 Circuits

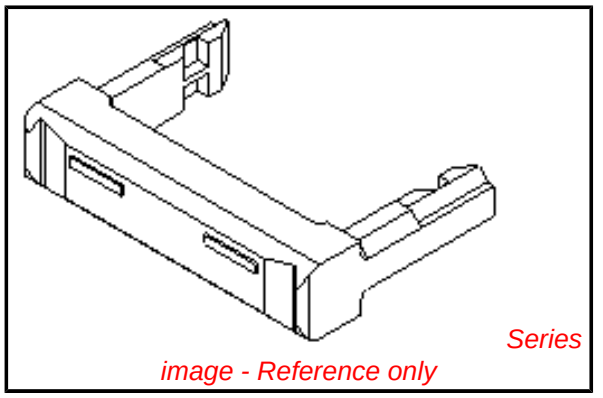

Documents:
3D Model
Drawing (PDF)
Product Specification PS-99020-0015 (PDF)
Packaging Specification PK-90170-001 (PDF)
RoHS Certificate of Compliance (PDF)

General

Product Family	Ribbon Cable / Wire Trap Connectors
Series	90170
Component Type	Strain Relief
Glow-Wire Compliant	No
Overview	QF-50™
Product Name	QF-50™
UPC	800753533547

Physical

Circuits (Loaded)	N/A
Circuits (maximum)	16
Color - Resin	Black
Entry Angle	N/A
Lock to Mating Part	Yes
Material - Plating Mating	N/A
Material - Resin	Polyester
Net Weight	0.538/g
Number of Rows	2
PCB Locator	No
PCB Retention	None
Packaging Type	Bag
Pitch - Mating Interface	1.27mm
Polarized to Mating Part	No
Stackable	No
Temperature Range - Operating	-25°C to +85°C
Wire Insulation Diameter	N/A
Wire Size AWG	N/A
Wire/Cable Type	Ribbon Cable

Electrical

Current - Maximum per Contact	1A
Voltage - Maximum	250V AC/DC

Material Info

Reference - Drawing Numbers

Packaging Specification	PK-90170-001
Product Specification	PS-99020-0015
Sales Drawing	SD-90170

EU RoHS
ELV and RoHS Compliant
REACH SVHC
Contains SVHC: No
Low-Halogen Status
Not Low-Halogen

China RoHS

Need more information on product environmental compliance?

Email productcompliance@molex.com
For a multiple part number RoHS Certificate of Compliance, click here

Please visit the Contact Us section for any non-product compliance questions.

Search Parts in this Series
90170Series

Use With
5320 , 90635